MANUFACTURING, INC.

1198 PERSHALL RD.
ST. LOUIS, MO 63137

OPERATING, MAINTENANCE AND PARTS MANUAL FOR V-22/HP-365A HYDRAULIC VIBRATORY PILE DRIVER/EXTRACTOR SYSTEM WITH CUMMINS ENGINE

CALIFORNIA
PROPOSITION 65 WARNING

DIESEL ENGINE EXHAUST AND SOME OF ITS CONSTITUENTS ARE KNOWN TO THE STATE OF CALIFORNIA TO CAUSE CANCER, BIRTH DEFECTS, AND OTHER REPRODUCTIVE HARM.

OCCUPATIONAL HEALTH WARNINGS:

1. Construction equipment frequently operates at very high sound levels. Such sound levels can be harmful to the human hearing system. Sustained exposure to such high sound levels can permanently impair one's hearing. **Hearing protection should be worn by anyone and everyone within close proximity to a Vibratory Pile Driver/Extractor System.**

2. Do not start or operate the V-22/HP-365A until having thoroughly read this manual and having received instructions from an MKT factory authorized service representative or properly trained, experienced operator.

Manual No. 140602

MKT MANUFACTURING, INC.
STANDARD NEW PRODUCT WARRANTY

EXPRESS LIMITED PARTS WARRANTY FOR NEW PRODUCTS

MKT MANUFACTURING, INC. ("MKT") warrants to the first user ("User") of any new product (whether such new product is sold directly to the customer by MKT or through a distributor) that such new product will be free from defects in material or workmanship for a period of ninety (90) days beginning on the date that such new product is delivered to the User. This Express Limited Parts Warranty ("Warranty") applies only to the first User of the new product, and not any subsequent users, regardless of whether such subsequent user becomes the owner of the new product or uses the product within such ninety (90) day warranty period. In no event shall this Warranty extend for more than twelve (12) months from the date that MKT ships the product, whether to a User or to a distributor which may or may not use the product. This Warranty applies to new products only. This Warranty is subject to the following terms and conditions.

If User believes that the product has a defect in the materials or workmanship, User shall send notice of such defect in writing to MKT within the ninety (90) day warranty period. MKT shall have the right to inspect the product for defects, and any parts which appear to MKT upon inspection to have been defective in material or workmanship shall be repaired or replaced at MKT's option. MKT shall have no other liability to User except for such repair or replacement of those parts determined to be defective. Such repair or replacement parts shall be provided at no cost to the User at such location and during such hours as determined by MKT. This Warranty shall not apply to component parts or accessories of products not manufactured by MKT, or to normal maintenance of the product or to normal maintenance parts required therefor. Replacement or repair parts installed in the products covered by this Warranty are warranted only for the remainder of the Warranty as if such parts were original components of said product. **EXCEPT AS EXPRESSLY SET FORTH IN THIS WARRANTY, MKT MAKES NO OTHER WARRANTIES, AND FURTHER DISCLAIMS ALL OTHER WARRANTIES, EXPRESS OR IMPLIED, AND MAKES NO WARRANTY OF MERCHANTABILITY OR FITNESS FOR ANY PARTICULAR PURPOSE.**

THIS WARRANTY IS NOT APPLICABLE TO ANY ITEM WHICH MKT SELLS THAT IS WARRANTED DIRECTLY TO THE USER BY THE MANUFACTURER OF SUCH ITEM (IF SUCH MANUFACTURER OF SUCH ITEM IS NOT MKT).

MKT EXCLUDES ALL LIABILITY FOR OR ARISING FROM ANY NEGLIGENCE ON ITS PART OR ON THE PART OF ANY OF ITS EMPLOYEES, AGENTS OR REPRESENTATIVES WITH RESPECT TO THE MANUFACTURE OR SUPPLY OF THE PRODUCT.

MKT shall not be liable to User or any third party for any loss of profits, loss of use, interruption of business, or any indirect, incidental, special, punitive or consequential damages of any kind whatsoever related to the product or the use or operation of the product. In particular, MKT assumes no liability for the results of User and its affiliates based on User's use of the products furnished by MKT. The maximum total liability of MKT shall be limited to the cost of those parts which MKT has agreed to repair or replace. This limitation applies to all causes of action in the aggregate, including without limitation, breach of contract, breach of warranty, negligence, strict liability, misrepresentations, and other torts. In any jurisdiction in which the above limitations of liability are restricted, MKT's liability is limited to the greatest extent permitted by law.

Notwithstanding anything in this Agreement to the contrary, MKT shall not be responsible for any costs or charges of User and/or any third party, including but not limited to transportation charges, shipping costs, cost of installation, duty, taxes or any other charges whatsoever including but not limited to any charges or damages due to any delays. If requested by MKT, products or parts for which a warranty claim is made are to be returned transportation prepaid to MKT at MKT's home office. Any improper use, including operation after discovery of defective or worn parts, operation beyond rated capacity, substitution of parts not approved by MKT, or any alteration or repair by others in such manner as in MKT's judgment affects the Product materially and adversely, shall void this Warranty.

NO EMPLOYEE OR REPRESENTATIVE IS AUTHORIZED TO CHANGE THIS WARRANTY IN ANY WAY OR GRANT ANY OTHER WARRANTY UNLESS SUCH CHANGE IS MADE IN WRITING AND SIGNED BY AN OFFICER OF MKT AT ITS HOME OFFICE.

TABLE OF CONTENTS

I. INTRODUCTION

The MKT V-22/HP-365A Hydraulic Vibratory Pile Driver/Extractor System is used for installing or removing piling. The three major components of an MKT V-22 Vibratory Pile Driver/Extractor include rotating eccentric weights housed within a gear box which generates the vibratory forces to drive or extract piles, a clamp housing to transmit vibratory forces to the pile section, and an elastomer suspension to isolate the vibratory forces from the crane line.

There are two rotating eccentric weights in the V-22 mounted in special heavy duty cylindrical roller bearings. A fixed displacement piston-type hydraulic motor is used to drive a pinion shaft and gears mounted directly to the eccentric weights. The gearing system maintains proper timing of the eccentrics during operation. When operating within its load capabilities, the V-22 vibrator is designed to deliver a driving force of about 100 tons to a pile at a rate of 1,650 vibrations per minute. The HP-365A hydraulic power unit is correspondingly designed to maintain the necessary hydraulic flow and pressure to the V-22 vibratory hammer.

The V-22/HP-365A system can be controlled from the control panel or remotely by a hand held pendant. Either set of controls allow the operator to start and stop the hammer, control the clamping on and off the piles, and provides a green light indicator for complete clamp closing.

II. SPECIFICATIONS FOR V-22/HP-365A VIBRATORY PILE DRIVER/EXTRACTOR SYSTEM

A. OPERATING DATA - V-22 DRIVER/EXTRACTOR

Driving Force	100 TON
Free Hanging Frequency	1,650 CPM
Free Hanging Amplitude	.75 - 1.00 INCH
Eccentric Moment	2,600 IN-LBS
Maximum Hydraulic Horsepower	365A HP
Clamp Force @ 3,000 PSI	75 TONS
Maximum Line Pull	45 TONS
Clamp Jaw Opening	1 3/8 INCH
Clamp Cylinder Travel	2 INCHES
Height	105 INCHES
Width @ Throat	16 1/4 INCHES
Shipping Width	75 INCHES
Hammer Weight	9,300 LBS
Clamp Hoses	2 - 3/4" I.D.
Drain Hose	1 - 3/4" I.D.
Motor Hoses	2 - 1 1/2" I.D.
Hose Bundle Weight	1,750 LBS

B. OPERATING DATA - HP-365A HYDRAULIC POWER UNIT

Diesel Engine	CUMMINS
Engine Horsepower	365 HP
Engine Operating Speed	2,250 RPM
Rated Hydraulic Flow	90 GPM
Rated Hydraulic Pressure	5,500 PSI
Fuel Tank Capacity	110 GALLONS
Hydraulic Tank Capacity	150 GALLONS
Length	132 INCHES
Width	48 INCHES
Height	84 INCHES
Net Weight	9,000 LBS

NOTE: WEIGHTS AND DIMENSIONS ARE APPROXIMATE

II. SPECIFICATIONS FOR V-22/HP-365A VIBRATORY PILE DRIVER/EXTRACTOR SYSTEM (CONTINUED)

C. HOSE BUNDLE

3 pieces - 50 ft. 1 1/2" I.D. Motor Pressure Line (4180043)
3 pieces - 50 ft. 1 1/2" I.D. Motor Return Line (4450290)
6 pieces - 50 ft. 3/4" I.D. Clamp Line (4200072)
3 pieces - 50 ft. 3/4" I.D. Drain Line (4200072)

***NOTE:** **Frequency and engine RPM are set to maximize performance on a normal pile, and normal duty cycle. Should overheating occur to either exciter or engine due to high duty cycle, it is important that the unit be stopped and allowed to cool down. If overheating persists, try reducing engine speed 100 to 200 RPM and monitor temperature. If exciter housing temperatures consistently reach and exceed 200 degrees Fahrenheit consider replacing the exciter lube oil using Shell Omala 220RL or Mobil SHC630.**

III. V-22/HP-365A COMPONENTS

The essential components of a complete V-22/HP-365A Hydraulic Vibratory Pile Driver/Extractor System are:

A. HP-365A diesel driven hydraulic power unit

B. Hydraulic hose bundle with five hoses(normally 150' long)

C. V-22 exciter fitted with a suspension assembly and hydraulic clamp assembly

D. 50' electrical remote control pendant and cable assembly

NOTE: **The power unit reservoir is factory filled with hydraulic oil meeting precise specifications for viscosity, viscosity index, pour point and inhibitors. The oil used, or its equivalent, is readily available from most major oil companies.**

IV. SYSTEM SET UP INSTRUCTIONS

A. HP-365A HYDRAULIC POWER UNIT

The HP-365A hydraulic power unit is assembled on a skid base which also serves as a fuel tank. The skid base is fitted with a lifting bail. The power unit is thus designed to be lifted by a crane line capable of lifting the 10,000 pound unit. Locate the HP-365A power unit on firm, level ground with an unobstructed operator view to the intended operation of the V-22 hammer.

B. CONNECTION OF HOSES

All V-22 hammers are thoroughly tested at the factory and consequently all hoses will be filled with hydraulic fluid. Generally, the hose bundle assembly filled with oil is disconnected from the hydraulic power unit. Therefore, it is necessary when reconnecting to make the correct hose connections to the power unit. There are five hoses in the bundle, each 150' long, one 1 1/2" I.D. high pressure line for the hydraulic motor supply, one 1 1/2" I.D. line for the motor return, two 3/4" I.D. lines for the hydraulic clamp assembly and one 3/4" I.D. line for the motor case drain. Hose connections at the hydraulic power unit are made easily by quick disconnect assemblies with check valves. The quick couplers have their plug and couplers alternately matched to prevent incorrect hose connections.

IV. SYSTEM SET UP INSTRUCTIONS (CONTINUED)

B. CONNECTION OF HOSES (CONTINUED)

1. When the hoses are attached to the vibratory unit, care should be made to have the bundle hanging free. Extreme care should be made at all times not to kink any of the hoses.

   As an example, the 1 1/2" motor line hoses have a minimum bend radius of 16 1/2". Even though these hoses have a minimum bursting pressure of 20,000 PSI, a kink will weaken the multiple spiral wire wrap reinforcement and ruptures could result at high operating pressures.

   NOTE: Any damaged hose within the hydraulic power unit, hose bundle, or vibratory hammer should be replaced with hoses of equivalent ratings.

2. Before making any hydraulic hose connections, assure that the connectors are wiped clean of any dirt or contamination to prevent subsequent contamination and damage to the components in the hydraulic system.

3. Do not permit mobile equipment to run over the hydraulic hose bundle. The hydraulic hose in the bundle, even though filled with hydraulic oil, is not able to withstand external compression forces.

4. The ends of the hoses in the hose bundle should be carefully wiped clean and connected, according to size, to the short hose lengths straddling the V-22 suspension assembly. If the hoses had previously been disconnected at this point.

5. Make it a habit whenever the hydraulic lines are disconnected to immediately cap or plug them to avoid contamination and damage to the components of the hydraulic system. Assure that the caps and plugs are wiped clean of any dirt or contamination before using.

IV. SYSTEM SET UP INSTRUCTIONS (CONTINUED)

C. V-22 DRIVER/EXTRACTOR

The V-22 hammer is factory fitted with its suspension assembly and is shipped flat on its side. It is designed to receive a 7/8" multiple loop wire rope sling properly sized and clamped to provide a factor of safety of five times the 45 ton maximum line pull capacity of the hammer, which in turn, can be slipped over a lifting crane hook. The V-22 hammer can be lifted from the horizontal to the vertical without danger of excessive stresses upon its connecting parts or structure.

1. Hanging in the air, the V-22 hammer should be hoisted, swung and rotated to assure that the hose bundle hangs free of any loops or entanglements.

2. Manipulating the V-22 hammer in the air during the foregoing procedure, as well as later when setting the hammer on a pile, will be made possible by fastening a ground handling rope to the V-22 clamp housing before hoisting the hammer aloft.

D. V-22 JAW SHIELD

The jaw shield is generally shipped connected to the V-22 clamp assembly. Before using the V-22 assure that the jaw shield is tightly connected (with four hex head cap screws and lock washers) to the V-22 clamp assembly. The jaw shield not only acts as a guide for positioning the V-22 on a standing pile, but is also necessary to protect the jaws and the clamp assembly from unnatural impact shock and resulting damage.

IV. SYSTEM SET UP INSTRUCTIONS (CONTINUED)

E. REMOTE CONTROL PENDANT AND CABLE ASSEMBLY

The V-22/HP-365A system has a 50' long remote control pendant and cable assembly that connects to the hydraulic power unit at the control panel.

CAUTION: THE REMOTE CONTROL PENDANT SHOULD NOT BE CONNECTED IF THE HAMMER IS BEING OPERATED FROM THE CONTROLS LOCATED ON THE CONTROL PANEL.

The remote control pendant and control panel each have two (2) push buttons and one (1) selector switch. The selector switch is used for jaw clamping or unclamping. When adequate clamp pressure has been attained within the hydraulic system a green light will be illuminated in the hammer start push button. Until this light has been illuminated the hammer will not start. The large red palm button is used for stopping the hammer.

V. START UP PROCEDURES

A. ENGINE FLUIDS

Make all lubricant, fuel, radiator, and preventive maintenance checks recommended in the Engine Manufacturer's Operating and Maintenance Manual before starting the diesel engine. **WARNING: DO NOT USE ETHER**. **The engine is equipped with an electric heater starting aid and the use of ether may cause severe injury.**

B. HYDRAULIC FLUID

Check the level of the hydraulic fluid in the reservoir in the HP-365A power unit. Do not operate the HP-365A with the hydraulic oil level below the gauge. If hydraulic fluid must be added to the system, do not allow foreign matter to enter the hydraulic system and use proper hydraulic oil for the HP-365A system. See the lubricant and hydraulic fluid requirements for the V-22/HP-365A system described in this manual.

C. HYDRAULIC VALVES AND PUMPS

The hydraulic valves and pumps in the HP-365A power unit have already been set for proper pressure during the factory break in and operating of the V-22/HP-365A system. **DO NOT MAKE ADJUSTMENTS TO THE VALVES OR PUMPS WITHOUT THE ASSISTANCE OF A FACTORY TRAINED SERVICE REPRESENTATIVE.**

The V-22/HP-365A system utilizes two hydraulic filters to maintain clean oil within the system. The charge oil for the main pump is filtered through a spin-on type filter located on the bottom of the pump. Hydraulic fluid returning from the motor is directed through the filter located on the back side of the power unit bulkhead. This filter has a full size bypass valve that protects the filter element and system with a minimum of pressure loss, therefore the filter as it becomes clogged will bypass contaminated oil back into the hydrastatic loop. Rigid schedules of the filter element changes should be followed to lengthen the life of all the hydraulic components.

The hydraulic reservoir has a suction strainer located in each of the suction lines leading to the pumps. When the hydraulic tank is drained for servicing, the strainers should be cleaned.

D. EXCITER HOUSING OIL LEVEL

The lubricating oil level in the V-22 exciter housing must be maintained at all times for proper lubrication of the gear train and eccentric bearings. Check the lube oil level by holding the exciter in a vertical position and viewing the two sight windows, if the oil is below the level sight gauge add oil. Too much oil in the initial check may indicate oil expansion or leakage of hydraulic oil into the exciter housing through the hydraulic motor seal.

V. START UP PROCEDURES (CONTINUED)

E. HYDRAULIC CLAMP CYLINDER

Whenever the hydraulic lines of the V-22/HP-365A system has been reconnected, **THE CLAMP CYLINDER CIRCUIT MUST BE BLED OF ENTRAINED AIR.** Lift the V-22 hammer vertically off the ground, switch the clamp selector switch to the "clamp close" position to close the jaws. Using the proper tools unscrew the vent valve screw located on the outboard end of the clamp cylinder.

CAUTION: A STREAM OF FROTHING HYDRAULIC FLUID WILL SHOOT FROM THE RELIEVED VENT SCREW.

After approximately thirty seconds, close the vent screw. Now switch the clamp selector switch to the "clamp open" position to open the jaws and repeat the process at the inboard vent valve screw. Repeat the procedure until an air free stream of oil comes from each relieved vent screw.

CAUTION: FAILURE TO COMPLETELY BLEED THE CLAMP CIRCUIT OF AIR MAY IMPAIR CLAMPING FORCE AND DAMAGE JAWS.

SEE PAGE 28 FOR BLEEDING ILLISTRATION

F. HYDRAULIC CIRCUITRY

The repetitive functions of the V-22 hammer are powered by two pumps contained within the HP-365A power unit. The hammer is first able to clamp onto a pile, vibrate the pile, stop vibration and unclamp from the pile. Two different types of hydraulic circuits are used to perform these functions.

The hydraulic clamp assembly is operated by the use of a pressure compensated piston pump and directional control valve. This pump is bolted to a mounting pad on the pump drive. Hydraulic fluid from the reservoir first passes through a suction strainer and then into a suction hose before entering the clamp pump. The hydraulic fluid leaving the pump is directed to the directional control valve. The directional control valve is shifted by the use of 12 volt solenoid operators. The pressure compensator on the pump is set at 3,000 PSI. When this pressure has been reached in either the clamp open or clamp close function, the pressure compensated pump will destroke and maintain itself in a zero flow condition. If any additional fluid is required the pump will respond to this need and again send fluid to the clamp open or clamp close function. There is also a pressure relief valve set at 3,500 PSI contained within the clamp directional control valve to act as a safety feature in case of a malfunction within the pressure compensator on the pump. The clamp circuit of the V-22/HP-365A system also has a pilot operated check valve on the clamp cylinder. In the event of a broken clamp hose or other loss of clamp pressure, the check valve will maintain clamp pressure on the pile.

V. START UP PROCEDURES (CONTINUED)

F. HYDRAULIC CIRCUITRY (CONTINUED)

The hydraulic motor on the V-22 hammer is powered by a piston pump operating in a closed-loop circuit. A small amount of motor flushing oil is taken through an orifice fitting on the clamp close line. The pressure compensated clamp pump will continuously flush the motor with approximately 3/4 - 1 GPM of oil while the clamp is in the closed position.

The hydraulic motor also has a relief valve installed in the case drain port. This relief valve is set at 80 PSI to provide protection from over-pressurization of the case drain line due to blockage or high internal motor leakage.

The pump is stroked from the zero position by the means of a hydraulic pilot signal. The signal is received from a small, 12 volt solenoid operated, directional control valve which may be located on the power unit skid or as an integral part of the pump. The pump has its own charge pump built into the pump housing and a pressure limiter system which destrokes the pump when a maximum pressure has been reached. Hydraulic fluid returning from the V-22 hammer motor is directed through a hydraulic filter before returning to the pump. The filter is located just inside of the power unit behind the bulkhead. Charge pressure oil on the pump is directed through a spin-on type filter located on the bottom of the pump. Warm hydraulic fluid is split off from the closed-loop circuit through a hot oil shuttle valve. The hot oil shuttle valve is mounted to a manifold which also supports the hydraulic filter. Warm oil from the shuttle valve is directed through the pump case and into a hydraulic oil cooler located in front of the engine radiator. Oil is then routed from the cooler back to the hydraulic reservoir.

G. START UP LIST

1. Open all enclosure doors.

2. Check engine water, fuel, and shut down solenoid to be sure it is locked in the proper position. Check hydraulic fluid.

3. Connect electrical pendant if the hammer will be operated from the remote pendant position.

4. Turn the control panel power switch to the remote or panel position. The remote pendant should not be connected if the hammer is being operated from the controls located on the control panel. A green lamp on the control panel will indicate that the power is on.

V. START UP PROCEDURES (CONTINUED)

G. START UP LIST (CONTINUED)

5. Start the engine at an idle speed of 600 - 800 RPM. Allow the engine to idle until charge pressure registers on the gauges. Check engine oil pressure.

6. Run the engine at part throttle for approximately five minutes for warm-up. It may be necessary to run the engine longer in cold weather conditions. After engine warm-up is completed bring engine speed up to the operating speed of 2,250 RPM. Some of the enclosure side doors may be closed at this time if desired.

7. Check the charge pressure gauges to be sure that the gauges register between 300 - 400 PSI.

8. Lift the hammer vertically off the ground.

9. Turn clamp switch on the pendant (or the panel) to the closed position, the clamp should close.

10. Check clamp pressure gauge to verify adequate clamping force (3,000 PSI). Bleed the clamp cylinder at the outboard end with the vent screw. **(CAUTION: Do not back the bleeder vent screw out all the way, oil and air will come out of the bleeder, let it run until you have a free stream of oil.)**

11. Operate the clamp switch on the pendant (or the panel) to the open position and bleed the inboard vent screw in the same manner. See page 28 for Instructions.

12. Failure to bleed the clamp circuit may impair clamping force and damage jaws!

13. After all the preceding steps have been taken hold the hammer vertically in the air to check the lubrication oil level in the exciter case. Sight glasses are located on the side of the exciter case. This level should be checked twice per day.

14. Control panel power switch will determine which hammer controls will be functional (remote pendant or panel).

15. Hammer start push button will become illuminated when adequate clamp pressure has been attained. If the button is not illuminated the hammer will not start.

VI. OPERATING INSTRUCTIONS

A. OPERATING THE V-22/HP-365A SYSTEM - DRIVING MODE

1. With a preset pile, the V-22 hammer with the clamp jaws open is hoisted above, centered over and lowered onto the pile head section which is to be gripped. **CAUTION: BEFORE CLOSING THE JAWS, ASSURE THAT THE PILE HEAD IS ENTERED COMPLETELY INTO THE OPENING BETWEEN THE JAWS. GRIPPING THE PILE WITH MERELY THE LOWER END OF THE JAWS WILL PUT UNNATURAL STRESSES ON THE JAWS AND CLAMP SYSTEM RESULTING IN POTENTIAL FAILURE OF THE JAWS, THE CLAMP SLIDE AND/OR OTHER CLAMP ASSEMBLY COMPONENTS.**

2. The clamp jaws will close upon the pile by operating the clamp close switch on either the remote pendant or panel. A built in pilot operated check valve system in the clamp cylinder assures that the jaws remain locked until powered in the opposite direction.

3. A pile is driven with the V-22 hammer by completely relaxing the hoist line after clamping the V-22 to a supporting pile.

4. The V-22/HP-365A hydraulic driver/extractor system responds as follows to an overload from the pile-soil system. When a pile can be moved no further and the hydraulic fluid pressure is at a maximum, the pressure limiters on the hydraulic pumps will destroke and slow down the V-22 frequency.

5. The addition of driving weight to the suspension of the V-22 hammer may aid to acquire some additional pile penetration. When a pile slows to a point of little movement however, the user will usually find it economically wise to discontinue trying to use the vibratory hammer and switch to some other driving system, such as an MKT diesel or steam/air impact hammer.

6. Occasionally the inability of the V-22 hammer to continue to move a pile will be the result of the pile striking an inpenetrable solid material or obstruction. The observable action of the V-22 hammer and clamped pile will be noted by a considerable fall-off of drive pressure and the exciter will "dance" in place. This "dancing" often causes an erratic interaction of the V-22 exciter and its suspension assembly. **CAUTION: WHENEVER THE V-22 HAMMER IS OBSERVED "DANCING" IN PLACE, IT SHOULD BE HOISTED UNTIL THE ACTION STOPS. SERIOUS DAMAGE MAY BE DONE TO THE V-22 HAMMER IF IT IS OPERATED IN THIS TYPE OF CONDITION.**

   To continue operation the obstruction must be removed or penetrated by switching to another driving system, such as a MKT diesel or steam/air impact pile hammer.

VI. OPERATING INSTRUCTIONS (CONTINUED)

B. OPERATING THE V-22/HP-365A SYSTEM - EXTRACTING MODE

1. A pile is extracted by merely tensioning the V-22 hammer hoisting line. The amount of pull which can be exerted on the V-22 hammer and extraction is limited by the rating of the suspension assembly and the tensile strength of the pile.

CAUTION: DO NOT PULL IN EXCESS OF THE RATING OF THE V22 HAMMER'S SUSPENSION ASSEMBLY OR EXCESS STRESSES WILL BE PUT ON THE SUSPENSION ASSEMBLY DAMAGING ONE OR MORE PARTS. EXTREME CARE MUST BE TAKEN DURING THE EXTRACTION PROCESS DUE TO THE HIGH LINE PULL FORCE APPLIED BY THE PULLING CRANE. THE REACTION DUE TO A SUDDEN LOSS OF LOAD MAY CAUSE THE CRANE BOOM TO FALL BACKWARDS ACROSS THE CRANE CAB. A SUDDEN LOSS OF LOAD COULD BE CAUSED BY A PARTED CRANE LINE, UNEXPECTED LOSS OF CLAMPING FORCE, OR SEPARATION OF THE PILE AT THE AREA HELD WITHIN THE CLAMPING JAWS. ("BITTING THE TOP OUT OF THE PILE")

CAUTION: A SECOND CRANE LINE SHOULD BE ATTACHED TO AN ADJACENT PILE ("DEAD MAN") AND DRAWN TIGHT AS A PRECAUTIONARY MEASURE AGAINST A SUDDEN LOSS OF LOAD. CRANES USED FOR PILE EXTRACTION APPLICATIONS SHOULD ALWAYS BE EQUIPPED WITH BOOM STOPS.

2. The ability of the V-22 hammer to switch instantly from driving to extracting mode by merely pulling on its hoist line, has evolved a pile driving procedure exclusive to vibratory usage. A hammer hanging on the number one crane line is swung into the air. A sheet pile, for example, is lifted from the ground on the number two crane line so that the head of the pile is pulled between the clamp jaws of the hammer. The jaws are then closed and the number two line is slacked. Both hammer and pile are then held by the number one line. The pile is stabbed in its location with the hammer. The hammer is then turned on and the pile is worked into the ground. Usually out of plumb at the outset, the pile is alternately driven and extracted until it penetrates the soil sufficiently to be self supporting. It is then pulled far enough to be straightened plumb and quickly driven. (Sheet piles are usually driven only a few feet and the adjacent pile is set.)

VI. OPERATING INSTRUCTIONS (CONTINUED)

B. OPERATING THE V-22/HP-365A SYSTEM - EXTRACTING MODE (CONTINUED)

3. For pile extracting operations, a V-22 hammer is frequently fitted with a shackle and a short auxiliary line attached the crane hook. The V-22 hammer is clamped to a steel sheet pile to be pulled and the shackle is fastened into the lifting hole in the pile. The V-22 hammer is operated to extract the pile until the pile can easily be lifted out of place exclusively by the line pull of the crane. The V-22 hammer is then stopped by depressing the stop push button. The pile is then pulled out of the ground, and the hammer and pile swung to where the pile will be stacked. The lower end of the pile is set on the ground and the V-22 hammer jaws are opened allowing the pile head to fall away from the jaws and hang by the line and shackle. The V-22 hammer and dangling pile are lowered to the ground where the shackle is disconnected from the pile.

C. SYSTEM SHUT DOWN PROCEDURES

1. Stop hammer and open jaws.

2. Reduce engine speed to idle (600 - 800 RPM) and allow to idle for several minutes.

3. To stop engine turn engine start switch to the off position.

4. Turn the main power selector switch on the control panel to the off position. The green indicator light on the panel will go off.

VII. MAINTENANCE AND SERVICE INSTRUCTIONS

A. The V-22 hammer and the HP-365A hydraulic power unit should be inspected regularly to help keep it in good operating condition. The time interval between necessary adjustments and repairs depends primarily on how much and how hard the machine has been used. Repair or replace broken or damaged parts as soon as they are discovered. Periodic cleaning and repainting will help keep all parts in better working order and prolong the machine's life.

B. Maintenance procedures for the diesel engine in the HP-365A are described in the engine manufacturer's manual.

C. Proper maintenance of the total V-22/HP-365A system begins with cleanliness; assuring that no dirt or foreign material enters the hydraulic fluid circuit. Contamination of the components of the hydraulic system - pumps, motors, valves, etc., will result in erratic operation, down time, shortened equipment life, damaged parts and expensive repair or replacement costs.

   To trap foreign material which might inadvertently enter the hydraulic circuit, the V-22/HP-365A system contains several filters and strainers. The spin-on type charge filter element located on the bottom of the main hydraulic pump should be changed after the initial fifty (50) hours of driving time or after the hydraulic fluid has been changed. During normal operation, this filter element should be changed at least two (2) times per year or after every 200 hours of driving time.

   The main hydraulic filter, located just within the HP-365A bulkhead, filters the hydraulic oil in the closed-loop system before it re-enters the main hydraulic pump. This filter element should also be changed on the intervals given for the charge filter element mentioned above. The main filter also has a visual indicator which will show if the filter is clogged and in a bypass condition. If the hydraulic oil is bypassing this filter a red band will be visible under the transparent dome of the indicator.

   The hydraulic oil in the reservoir passes through a suction strainer before it enters either of the pumps. These strainers should be cleaned whenever the hydraulic tank is serviced.

D. The hydraulic fluid in the system should be maintained at all times. Leaks in the hydraulic system, particularly noticeable after transport and set up of this system, should be eliminated by checking and retightening the leaking parts. Hose connections may leak as a result of manipulating and straightening the lines and should be promptly tightened. **THE CAUSE OF HYDRAULIC LEAKS WHICH CANNOT BE CORRECTED SHOULD BE ELIMINATED BY CALLING FOR FACTORY AUTHORIZED DISTRIBUTOR SERVICE ASSISTANCE.**

1. Check the hydraulic fluid level on the HP-365A tank gauge before and during operation of the V-22/HP-365A system. **DO NOT OPERATE THE V-22/HP-365A SYSTEM IF THE HYDRAULIC FLUID REGISTERS BELOW THE TANK FLUID GAUGE.**

2 In normal, safe operation of the V-22/HP-365A system, the hydraulic fluid temperature should remain in its typical range of 115 degrees Fahrenheit to 165 degrees Fahrenheit. This temperature can be read on the thermometer located on the control panel.

CAUTION: IF THE HYDRAULIC OIL TEMPERATURE BECOMES EXCESSIVE (ABOVE 180 DEGREES FAHRENHEIT) STOP OPERATIONS AND CONSULT WITH THE NEAREST FACTORY AUTHORIZED SERVICING DISTRIBUTOR.

A temperature switch will automatically turn on a red light on the control panel if the temperature reaches 170 degrees Fahrenheit.

E. Make a daily check of all hoses in the hydraulic hose bundle for cuts or other damage. Hoses are sometimes cut or bruised by dragging them across pile heads while setting the V-22 hammer. Stop V-22 hammer operations that may cause damage to the hoses and redirect the hose bundle to avoid dragging and damage. Damaged hose sections must be replaced to eliminate failure and down time during operations.

F. Inspect the V-22 hammer for normal hanging posture and loosened fasteners, particularly on the suspension and clamp assemblies before and during operation.

SAFETY WARNING: STAND AWAY FROM THE PILE AND FROM BELOW THE V-22 DURING VIBRATING OPERATIONS. ANY UNOBSERVED, UNCORRECTED, LOOSE NUT OR OTHER FASTENER MAY FALL.

G. Assure that the proper lube oil level is maintained in the V-22 exciter case. If the level of oil is above the sight gauge or the lube oil volume is increasing this may be an indication that the hydraulic motor is leaking hydraulic fluid through the motor drive shaft seal. Any seal leakage must be corrected immediately. The mixture of hydraulic oil and lube oil is not a lube problem but the increasing level will add load to the rotating eccentrics and cause excessive foaming.

The lube oil in the V-22 exciter case should be changed after every 50 hours of driving time.

VII. MAINTENANCE AND SERVICE INSTRUCTIONS (CONTINUED)

H. The V-22/HP-365A system normally has the hydraulic reservoir, hose bundle, and hammer lines filled with hydraulic fluid. Whenever the system has been completely or partially drained (as when a new hose bundle section is replaced in the hose bundle), the hydraulic lines must be purged of air.

I. Daily maintenance check lists - Check the entire unit prior to and during start up of each shift.

1. Prior to starting the engine at each shift, check as follows:

   a. Make all daily lubrication and preventive maintenance checks indicated in the engine manufacturer's operating and maintenance manual.

   b. Check the hydraulic fluid level before starting the engine. Recheck this level after filling the lines to be sure it remains in the safe operating range. Do not operate the unit with the hydraulic fluid level below the gauge.

   c. Visually check all hoses for signs of damage or cuts that might cause hose failure during operation. Be sure all connections are tight, especially the quick disconnects.

   d. Look for any damage to the unit, in general that might cause it to fail when put into operation.

   e. Be sure there is fuel in the tank.

   f. Be sure there is cooling fluid in the radiator.

   g. Check the V-22 exciter case lube oil level.

   h. Check the V-22 clamping jaws for excessive wear, cracks or loose fasteners. If it is necessary, the removal of the movable jaw is done by pushing out the 3/4" roll pin. The single vertical roll pin captivates the movable jaw. The fixed jaw is held tight against the housing with two (2) 1" bolts. Also, operating the V-22 on piling without the jaw shield could result in jaw damage if the hammer is dropped onto the pile.

   i. Check all fasteners to assure that they are tight.

VII. MAINTENANCE AND SERVICE INSTRUCTIONS (CONTINUED)

i. **WARNING: DO NOT START THE POWER UNIT IF THE CLAMP PUMP HAS BEEN INOPERABLE FOR A LONG PERIOD OF TIME WITHOUT FIRST CHECKING TO BE SURE THAT THE PUMP IS PRIMED (I.E., THE PUMP CASE FULL OF OIL). THIS WILL PREVENT THE STARTING OF THE PUMP WITHOUT LUBRICATION WHICH CAN CAUSE PUMP DAMAGE. TO CHECK THE CLAMP PUMP REMOVE THE DRAIN HOSE AND VISUALLY DETERMINE IF THE CASE IS FULL OF OIL. IF OIL MUST BE ADDED TO THE PUMP FOR PRIMING, EXTREME CARE MUST BE TAKEN WITH THE CLEANLINESS OF THE POURING CONTAINER, FUNNEL, HOSE AND ADAPTERS. THE OIL BEING INTRODUCED TO THE SYSTEM BY PRIMING SHOULD PASS THROUGH A 10 MICRON FILTER.**

2. After start up and operation of the V-22 hammer, check as follows:

   a. Inspect the hydraulic lines for leaks.

   b. Inspect the oil seal areas in the pump drive and control valves for leaks.

   c. Allow hydraulic oil temperature to come up slightly above the pour temperature, preferable to 30 degrees Fahrenheit before starting the hammer.

   d. Before attaching to a pile, open and close the clamp jaws to verify fast and positive action.

   e. Be sure that there are no kinks in the hydraulic lines and that they hang uniformly.

   f. Always maintain a close check on the lifting cable to assure no fraying has occurred.

   g. Check for overheated bearing housings.

VII. MAINTENANCE AND SERVICE INSTRUCTIONS (CONTINUED)

J. The HP-365A hydraulic reservoir, V-22 exciter case and HP-365A pump drive have been filled with the proper fluids at the factory. Use the following list for adding fluids which are compatible with those used at the factory.

1. **HP-365A Hydraulic Fluid**

   Shell Tellus **"S"** 32 . . . . . Capacity - 150 Gallons

2. **V-22 Lube Oil**

   Shell Omala RL 220 . . . . . Capacity - 5 Gallons

3. **HP-365A Pump Drive**

   Sunfleet GL-5-90 or equivalent

K. Normal gauge reading during operation of the HP-365A hydraulic power unit:

1. Engine Speed - 2,250 RPM
2. Drive Pressure - 1,200 to 5,000 PSI
3. Clamp Pressure – 3,000 PSI
4. Hydraulic Charge Pressure - 250 to 350 PSI
5. Hydraulic Oil Temperature - 115 degrees Fahrenheit to 165 degrees Fahrenheit

L. Hydraulic filters and V-22 lube oil change intervals:

1. Spin-on type charge filter element

   a. Change after initial 50 hours of driving time or after the hydraulic oil has been changed.

   b. Change at least two (2) times per year or after every 200 hours of driving time.

VII. MAINTENANCE AND SERVICE INSTRUCTIONS (CONTINUED)

L. Hydraulic filters and V-22 lube oil change intervals:

2. Main hydraulic filter

a. Change after initial 50 hours of driving time or after the hydraulic oil has been changed.

b. Change at least two (2) times per year or after every 200 hours of driving time.

3. V-22 exciter case lube oil

a. Change after every 50 hours of driving time

M. In general the field service that is done by the operators of the V-22/HP-365A is limited to daily maintenance. The drawings and related parts for identification given in this manual are for reference while discussing troubles or symptoms of trouble with the service department of your authorized distributor. Many times the troubles are minor and corrections can be made by consulting with and being directed by your authorized distributor.

CAUTION: ADJUSTMENT OF THE FACTORY SET VALVES AND PUMPS OF THE V-22/HP-365A SYSTEM SHOULD ONLY BE MADE BY A FACTORY AUTHORIZED DISTRIBUTOR SERVICE REPRESENTATIVE. ATTEMPTS TO RANDOMLY MAKE SUCH ADJUSTMENTS MAY SERIOUSLY MISADJUST THE ENTIRE SYSTEM AND THEREBY VOID THE EQUIPMENT WARRANTY.

N. HYDRAULIC FILTERS

DESCRIPTION	MKT PART NUMBER	QUANTITY
Main Return Filter Element	931 08 55	1
Charge Filter	944 02 15	1

VIII. DRAWINGS AND PARTS LISTS

This manual includes the following drawings and parts lists:

A. V-22 GENERAL ASSEMBLY AND PARTS LIST

B. HYDRAULIC CLAMP ASSEMBLY AND PARTS LIST

C. ECCENTRIC SHAFT ASSEMBLY AND PARTS LIST

D. MOTOR SHAFT ASSEMBLY AND PARTS LIST

E. HP-365A GENERAL ASSEMBLY AND PARTS LIST

F. 150' HYDRAULIC HOSE BUNDLE ASSEMBLY AND PARTS LIST

G. HP-365A CONTROL PANEL - CUMMINS HYDRAULIC POWER UNIT AND PARTS LIST

H. HP-365A/HP600 ELECTRICAL CONTROL ASSEMBLY AND PARTS LIST

I. REMOTE PENDANT/CABLE ASSEMBLY AND PARTS LIST

J. HP-365A ELECTRICAL SCHEMATIC

K. V22/HP-365A HYDRAULIC SCHEMATIC AND PARTS LIST

L. CAISSON CLAMP ASSEMBLY

This information is included for the user to have a point of reference while discussing trouble shooting actions with the service department of his factory authorized distributor. Call your nearest MKT factory authorized distributor to remedy any abnormal occurrences in the operation of your V22/HP-365A system.

Successful internal repairs and general overhaul of a V22/HP-365A hydraulic vibratory pile driver/extractor system must be handled as a clean shop procedure. MKT factory authorized distributors are properly equipped and should be contacted to provide such service.

For the name and address of the nearest MKT factory authorized distributor call **MKT Manufacturing Inc., St. Louis, Missouri at 314/388-2254.**

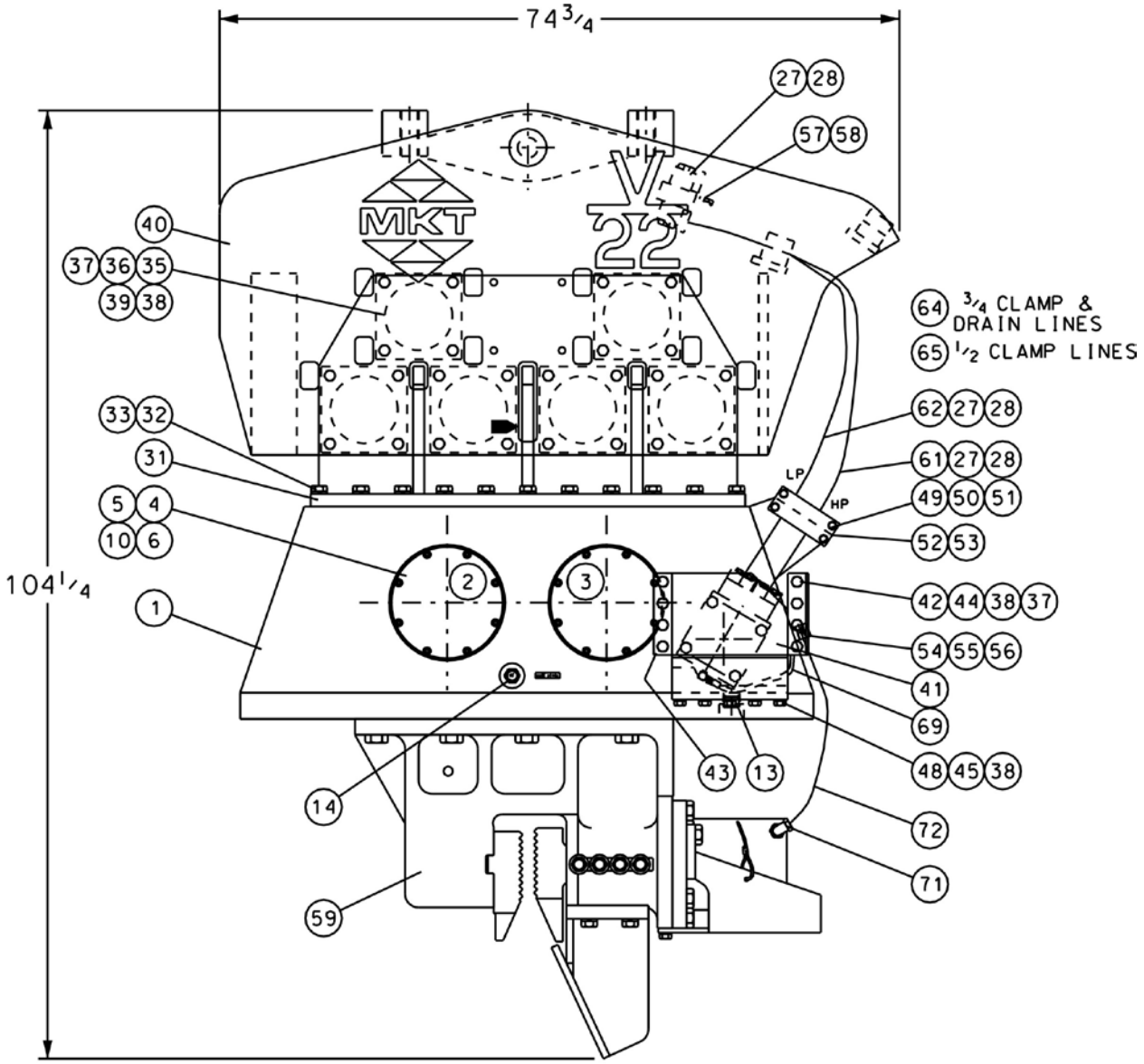

V-22 GENERAL ASSEMBLY

PARTS LIST
V22 GENERAL ASSEMBLY
(419 00 00)

ITEM NO.	MKT PART NO.	DESCRIPTION	QUANTITY REQUIRED
1	419 00 02	EXCITER CASE	1
2	419 00 15	GEAR/ECCENTRIC ASS'Y-MALE	1
3	419 00 16	GEAR/ECCENTRIC ASS'Y-FEMALE	1
4	419 00 12	BEARING COVER	4
5	913 02 19	O-RING	4
6	905 07 11	SOCKET HEAD CAP SCREW	32
7	419 00 13	BEARING COVER	1
8	913 02 18	O-RING	1
9	905 07 09	SOCKET HEAD CAP SCREW	6
10	914 01 25	BEARING	4
11	914 01 26	PINION BEARING	2
12	419 00 09	PINION	1
13	931 00 02	MAGNETIC PLUG	2
14	931 04 79	SITE GLASS	1
15	405 01 00	NAMEPLATE- LUBE LEVEL	1
16	499 02 13	NAMEPLATE-SERIAL NUMBER	1
17	099 06 00	NAMEPLATE- EAR PROTECTION	1
19	420 00 82	NAMEPLATE-OIL SPEC.	1
20	405 01 02	NAMEPLATE-LUBE FILL	1
21	930 00 23	PIPE PLUG	1
22	910 00 70	HYDRAULIC MOTOR	1

PARTS LIST
V22 GENERAL ASSEMBLY
(419 00 00)

ITEM NO.	MKT PART NO.	DESCRIPTION	QUANTITY REQUIRED
23	430 00 24	MOTOR GASKET	1
24	901 59 17	HEX HEAD CAP SCREW	4
25	902 05 15	FLAT WASHER	4
27	923 12 22	FLANGE ADAPTER	6
28	923 03 14	ADAPTER	6
29	923 05 54	ADAPTER	1
30	923 05 26	ADAPTER	1
31	419 00 03	SUSPENSION BASE	1
32	901 61 17	HEX HEAD CAP SCREW	26
33	903 06 12	LOCK WASHER	26
34	942 00 11	RELIEF FITTING	1
35	941 00 14	SHEAR BLOCK	12
36	901 59 19	HEX HEAD CAP SCREW	24
37	900 50 07	HEX NUT	80
38	903 06 10	LOCK WASHER	89
39	901 59 25	HEX HEAD CAP SCREW	48
40	419 00 05	SUSPENSION HOUSING	1
41	405 03 38	MOTOR GUARD	1
42	419 00 22	BRACKET-MOTOR GUARD	1
43	419 00 21	BRACKET-MOTOR GUARD	1
44	901 59 13	HEX HEAD CAP SCREW	8

PARTS LIST
V22 GENERAL ASSEMBLY
(420 10 00)

ITEM NO.	MKT PART NO.	DESCRIPTION	QUANTITY REQUIRED
45	901 59 13	HEX HEAD CAP SCREW	5
48	416 01 21	SUPPORT MOTOR GUARD	1
49	430 00 52	HOSE BLOCK	1
50	901 57 21	HEX HEAD CAP SCREW	4
51	903 06 08	LOCK WASHER	4
52	419 00 18	HOSE BLOCK	1
53	901 57 11	HEX HEAD CAP SCREW	2
54	419 00 23	FLUSHING MANIFOLD	1
55	405 03 01	ORIFICE FITTING	1
56	923 05 79	ADAPTER	4
57	923 09 17	ADAPTER	2
58	923 11 95	ADAPTER	3
59	416 01 30	CLAMP ASSEMBLY	1
61	419 00 24	HOSE ASSEMBLY-HP 60”	2
62	419 00 25	HOSE ASSEMBLY-LP 60”	2
64	419 00 26	HOSE ASSEMBLY- 60”	4
65	419 00 27	HOSE ASSEMBLY-66.5”	2
66	901 55 05	HEX HEAD CAP SCREW	1
67	903 01 11	LOCK WASHER	1
68	943 02 82	HOSE CLAMP	1
69	430 11 11	HOSE ASSEMBLY-28”	1

PARTS LIST
V22 GENERAL ASSEMBLY
(419 00 00)

ITEM NO.	MKT PART NO.	DESCRIPTION	QUANTITY REQUIRED
70	416 01 60	150’ HOSE BUNDLE	1
71	923 11 23	ADAPTER	2
72	419 00 28	HOSE ASSEMBLY-22”	2
73	901 63 15	HEX HEAD CAP SCREW-CLAMP	8

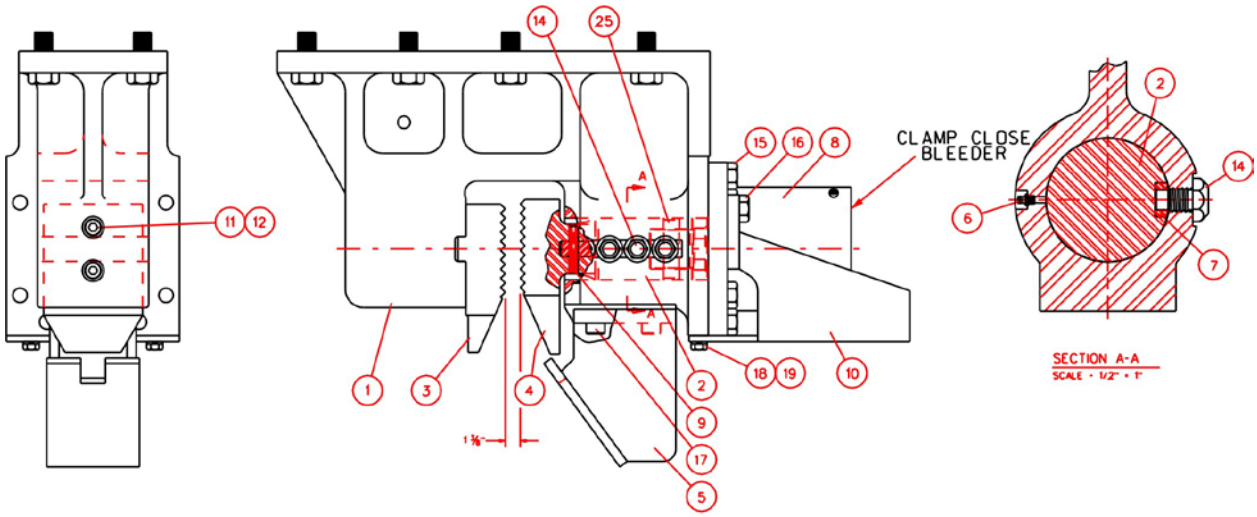

NOTE - PRESS FIT PIN, ITEM 25, THRU SLIDE, ITEM 2, AND INTO HYD. CYLINDER, ITEM 8, SHAFT BEFORE ASSEMBLING TO CLAMP HOUSING, ITEM 1.

CLAMP BLEEDING PROCEDURE

THE FOLLOWING PROCEDURES MUST BE DONE TO ENSURE PROPER CLAMPING FUNCTION
- JAW DAMAGE WILL OCCUR IF NOT DONE -

1) START POWER UNIT WITH HAMMER HANGING VERTICAL
2) SELECT THE CLAMP CLOSE FUNCTION ON PENDENT CONTROL.
NOTICE: VERIFY THAT ALL PERSONNEL ARE CLEAR OF CLAMP ASSEMBLY
3) WITH CLAMP PRESSURE REGISTERED ON GAUGE (V-20B @ 3,000 PSI AND V-35 @ 2,750)
BLEED CLAMP CYLINDER AT INDICATED BLEEDER PORT WITH 1/8 ALLEN WRENCH.

FOR MORE DETAILED INFORMATION REFER TO THE START UP PROCEDURE IN THE MANUAL

DO NOT BACK BLEEDERS OUT MORE THAN ONE COMPLETE TURN

FOR ASSISTANCE CALL 1-314-869-8600

V-22 HYDRAULIC CLAMP ASSEMBLY
(416 01 30)

PARTS LIST
V-22 HYDRAULIC CLAMP ASSEMBLY
(416 01 30)

ITEM NO.	MKT PART NO.	DESCRIPTION	QUANTITY REQUIRED
1	420 01 28	CLAMP HOUSING	1
2	495 00 76	CLAMP SLIDE	1
3	436 01 41	CLAMP JAW - FIXED	1
4	420 01 26	CLAMP JAW - MOVABLE	1
5	495 04 39	JAW SHIELD	1
6	942 00 14	GREASE FITTING	1
7	416 01 42	SLIDE KEY	1
8	416 01 31	CLAMP CYLINDER	1
9	924 00 55	SPIRAL PIN	1
10	405 03 04	CYLINDER SHIELD	1
11	905 11 41	SOCKET HEAD CAP SCREW	2
12	903 04 21	LOCKWASHER	6
14	405 00 91	SLIDE KEY BOLT	4
15	901 62 18	HEX HEAD CAP SCREW	6
16	901 62 24	HEX HEAD CAP SCREW	2
17	905 11 15	SOCKET HEAD CAP SCREW	4
18	903 01 17	LOCKWASHER	4
19	901 59 13	HEX HEAD CAP SCREW	4
20	420 01 12	CLAMP JAW - SCREW TYPE - MOVABLE	AS REQ'D

PARTS LIST
V20B HYDRAULIC CLAMP ASSEMBLY
(416 01 30)

ITEM NO.	MKT PART NO.	DESCRIPTION	QUANTITY REQUIRED
21	420 01 33	CLAMP JAW - SCREW TYPE - FIXED	AS REQ'D
23	499 00 96	CLAMP JAW - DOUBLE SHEET FIXED	AS REQ'D
24	420 01 36	CLAMP JAW - DOUBLE SHEET MOVABLE	AS REQ'D
25	420 01 38	PIN, CLAMP SLIDE	1
26	420 01 14	CLAMP SLIDE (ALT.)	AS REQ'D

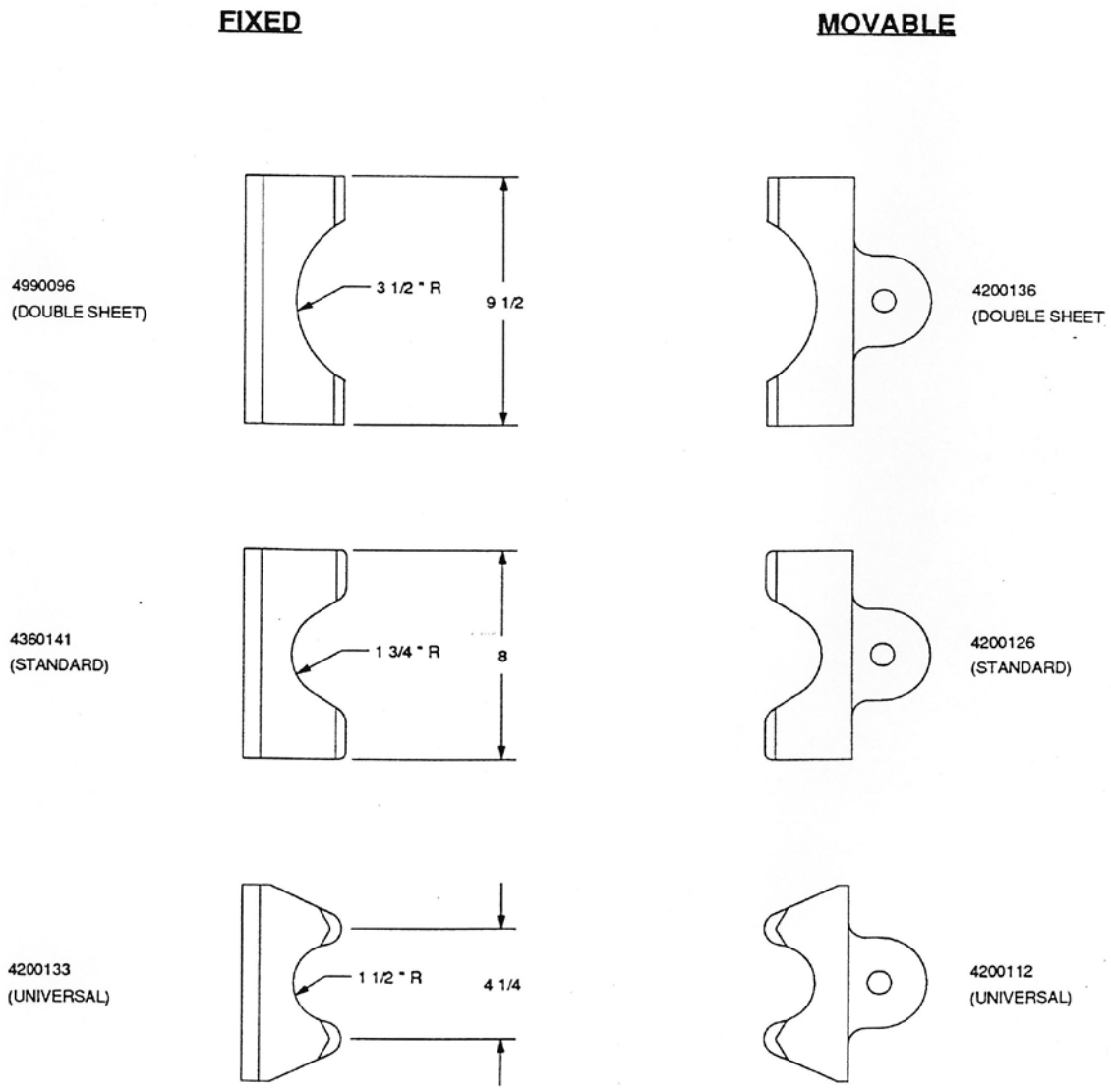

OPTIONAL V-22 CLAMP JAWS

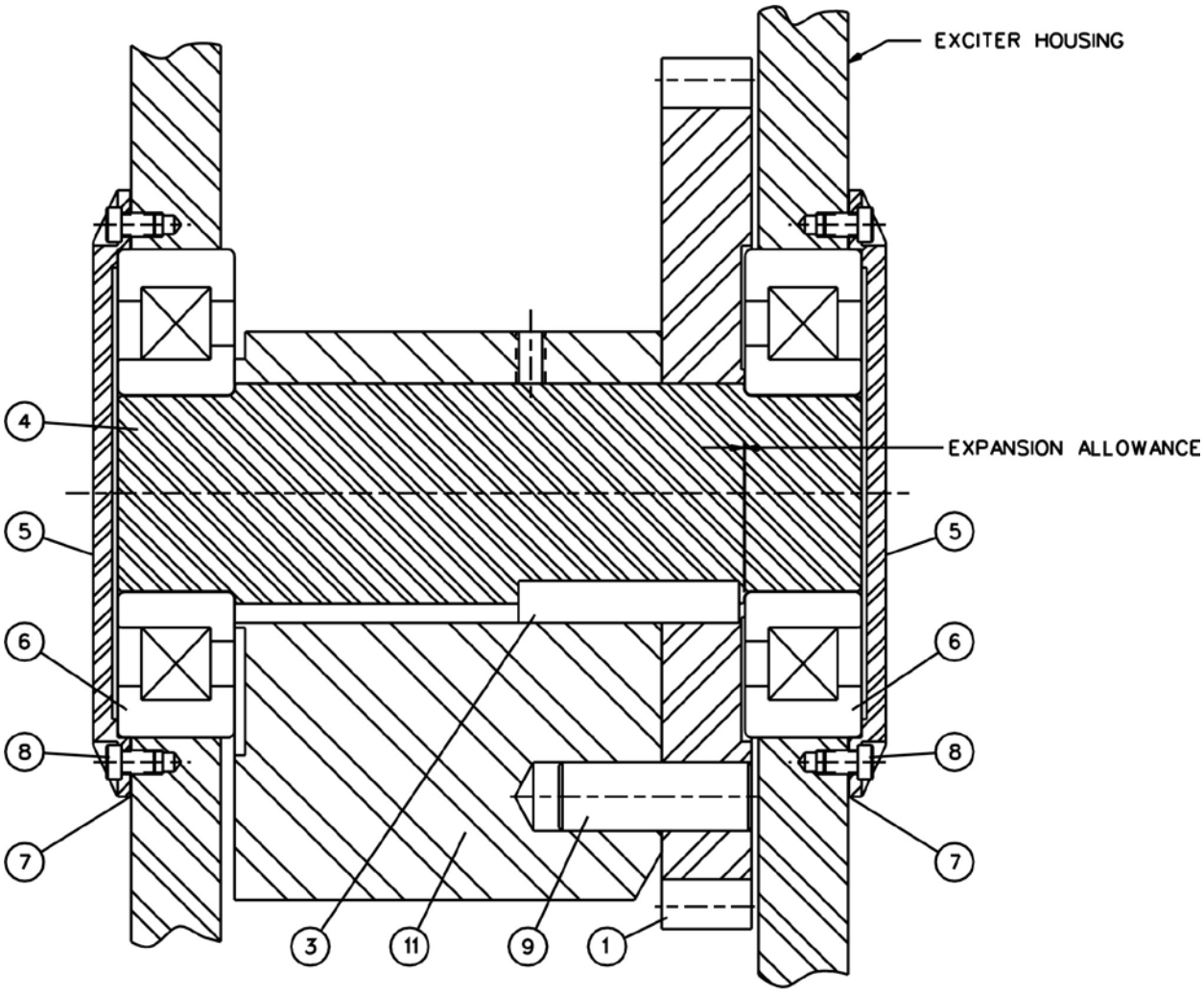

ECCENTRIC SHAFT ASSEMBLY
V-22 VIBRATORY HAMMER

PARTS LIST
V22 ECCENTRIC SHAFT ASSEMBLY

ITEM NO.	MKT PART NO.	DESCRIPTION	QUANTITY REQUIRED
1	419 00 15	ECCENTRIC - GEAR SUB ASSEMBLY m (USING GEAR PART NUMBER 419 00 07)	1
2	419 00 16	ECCENTRIC - GEAR SUB ASSEMBLY f (USING GEAR PART NUMBER 419 00 08)	1
3	430 00 41	ECCENTRIC KEY	1
4	419 00 10	ECCENTRIC SHAFT	1
5	419 00 12	BEARING COVER	2
6	914 01 25	CYLINDRICAL ROLLER BEARING	2
7	913 02 19	O-RING	2
8	905 07 11	SOCKET HEAD CAP SCREW	12
9	430 02 27	PIN	1
10	905 10 09	SOCKET HEAD CAP SCREW (NOT SHOWN ON DRAWING)	4

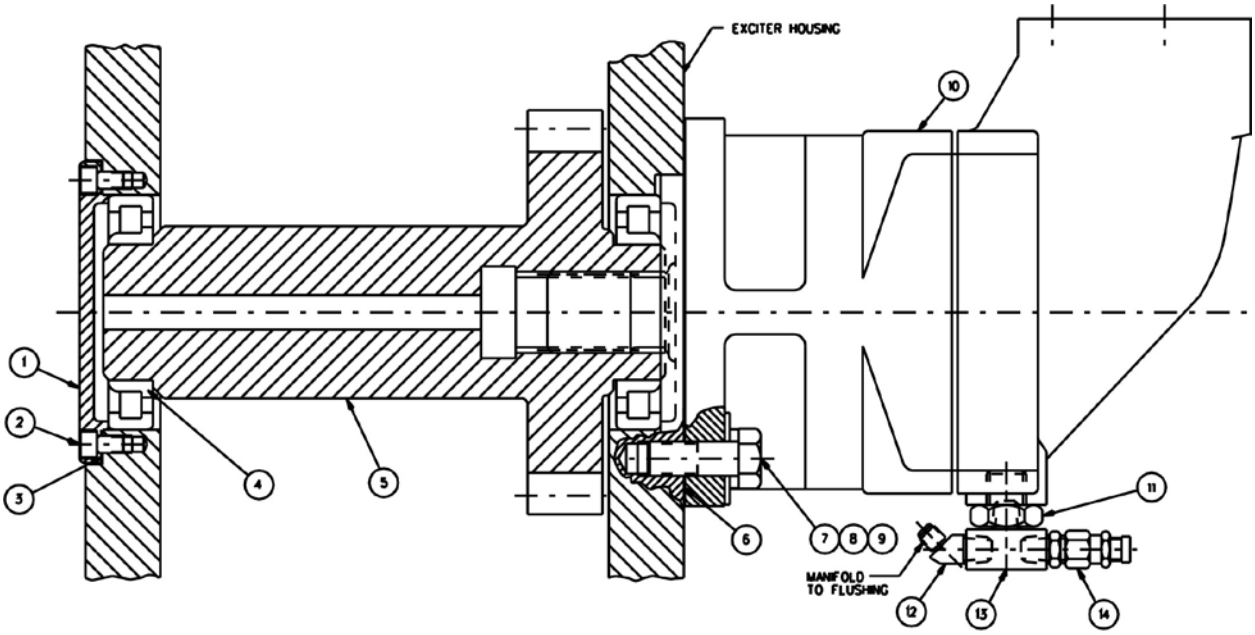

MOTOR SHAFT ASSEMBLY
V-22 VIBRATORY HAMMERS

PARTS LIST
V22 MOTOR SHAFT ASSEMBLY

ITEM NO.	MKT PART NO.	DESCRIPTION	QUANTITY REQUIRED
1	419 00 13	MOTOR SHAFT COVER	1
2	905 07 09	SOCKET HEAD CAP SCREW	6
3	913 02 18	O-RING	1
4	914 01 26	SPHERICAL ROLLER BEARING	2
5	419 00 09	V22 ONE PIECE MOTOR PINION AND SHAFT	1
6	430 00 24	GASKET, HYDRAULIC MOTOR	1
7	901 59 17	HEX HEAD CAP SCREW	4
8	903 01 17	LOCKWASHER	4
9	902 01 05	FLATWASHER	4
10	910 00 70	HYDRAULIC MOTOR	1
11	923 12 08	MODIFIED PLUG	1
12	923 05 43	ADAPTER	1
13	923 03 13	ADAPTER	1
14	405 02 83	DRAIN RELIEF VALVE ASSEMBLY	1

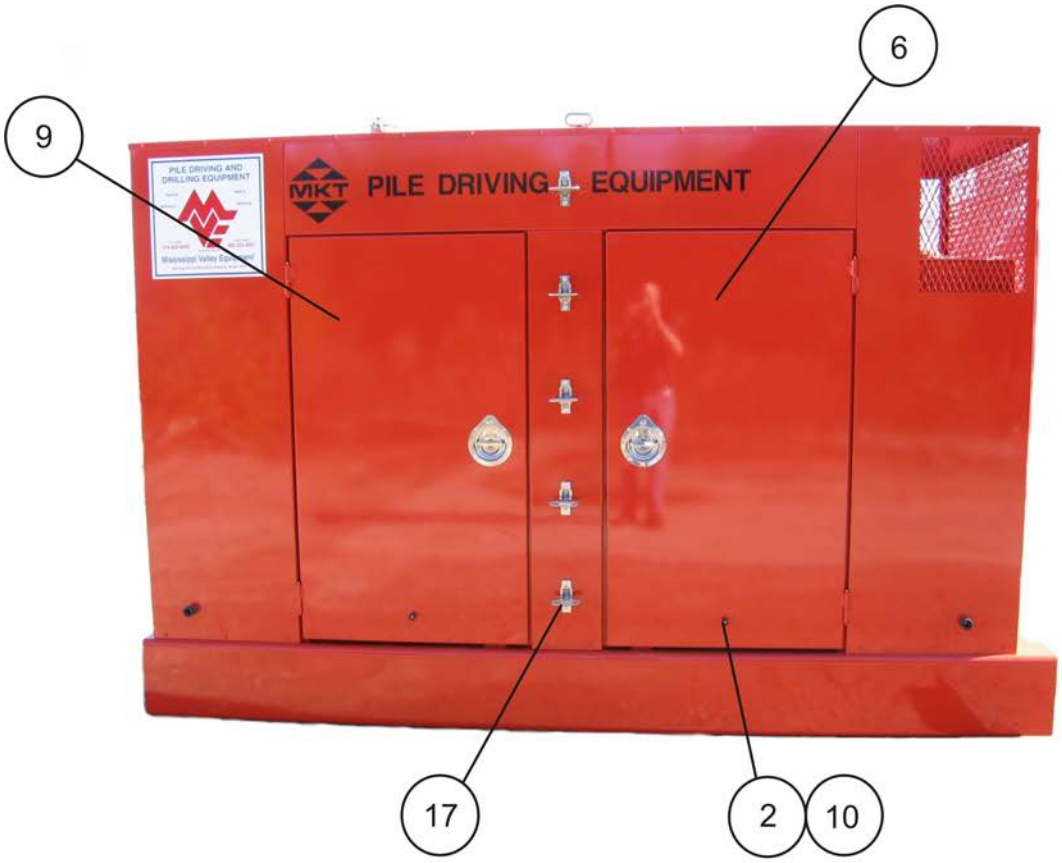

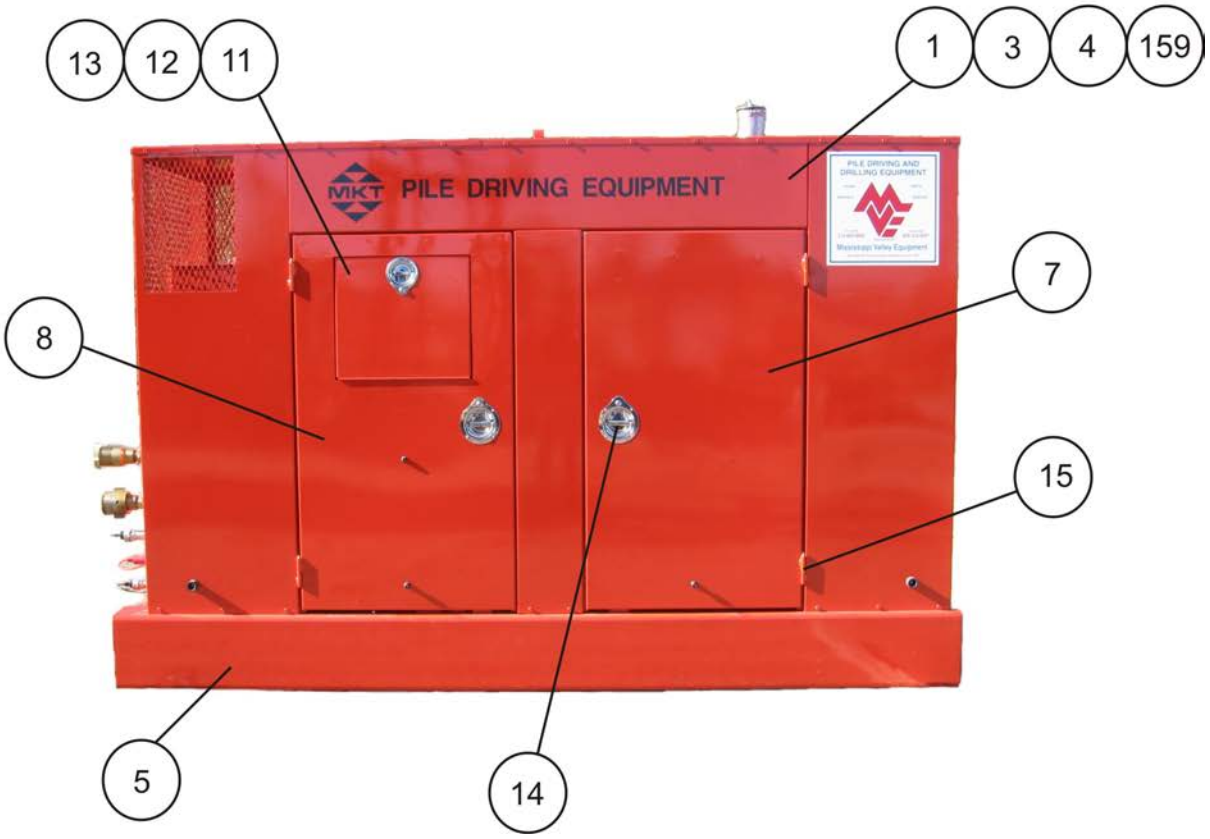

HP-365A POWER UNIT ASSEMBLY

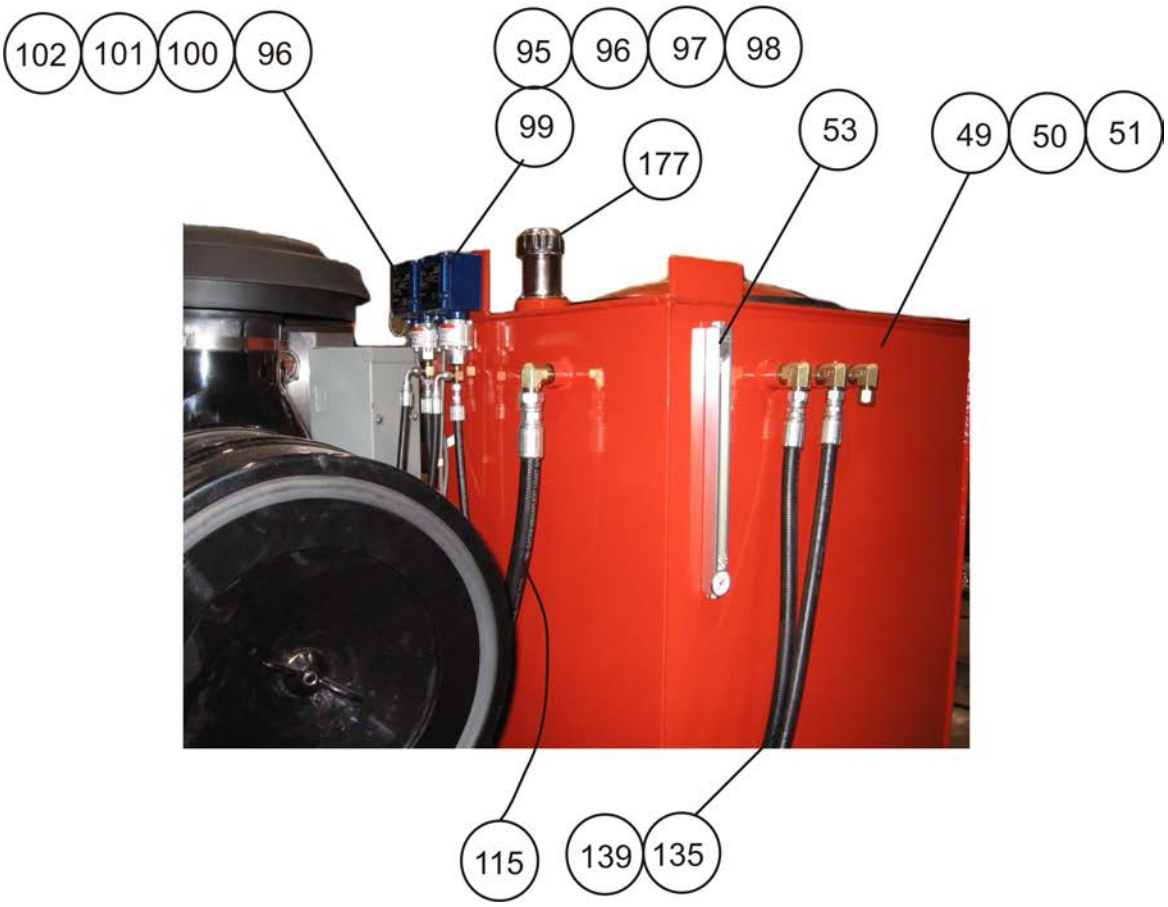

HP-365A POWER UNIT ASSEMBLY

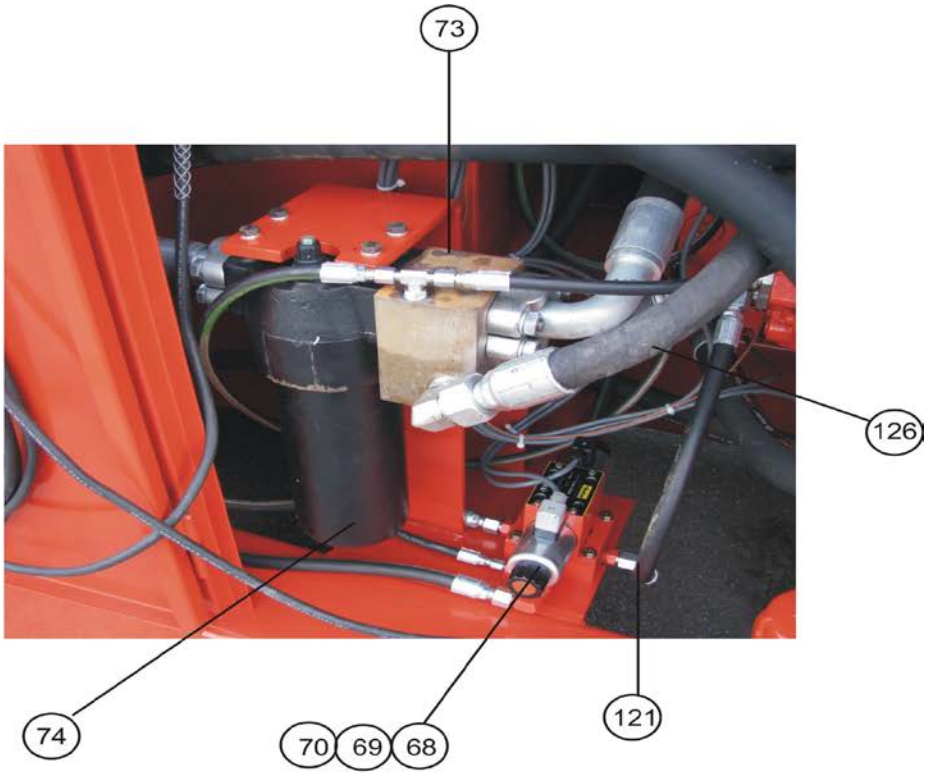

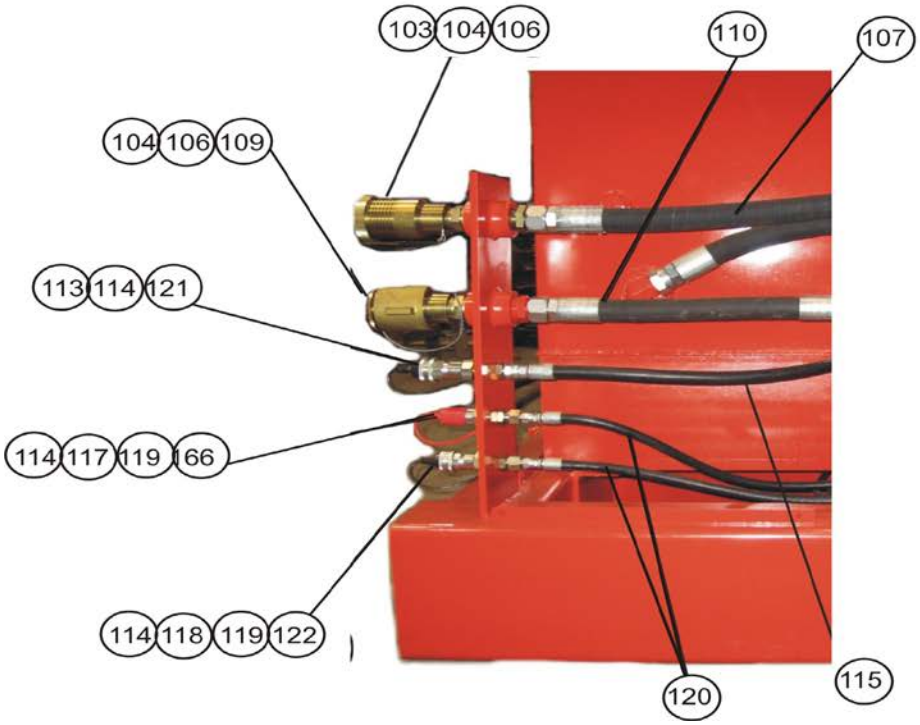

HP-365A POWER UNIT ASSEMBLY

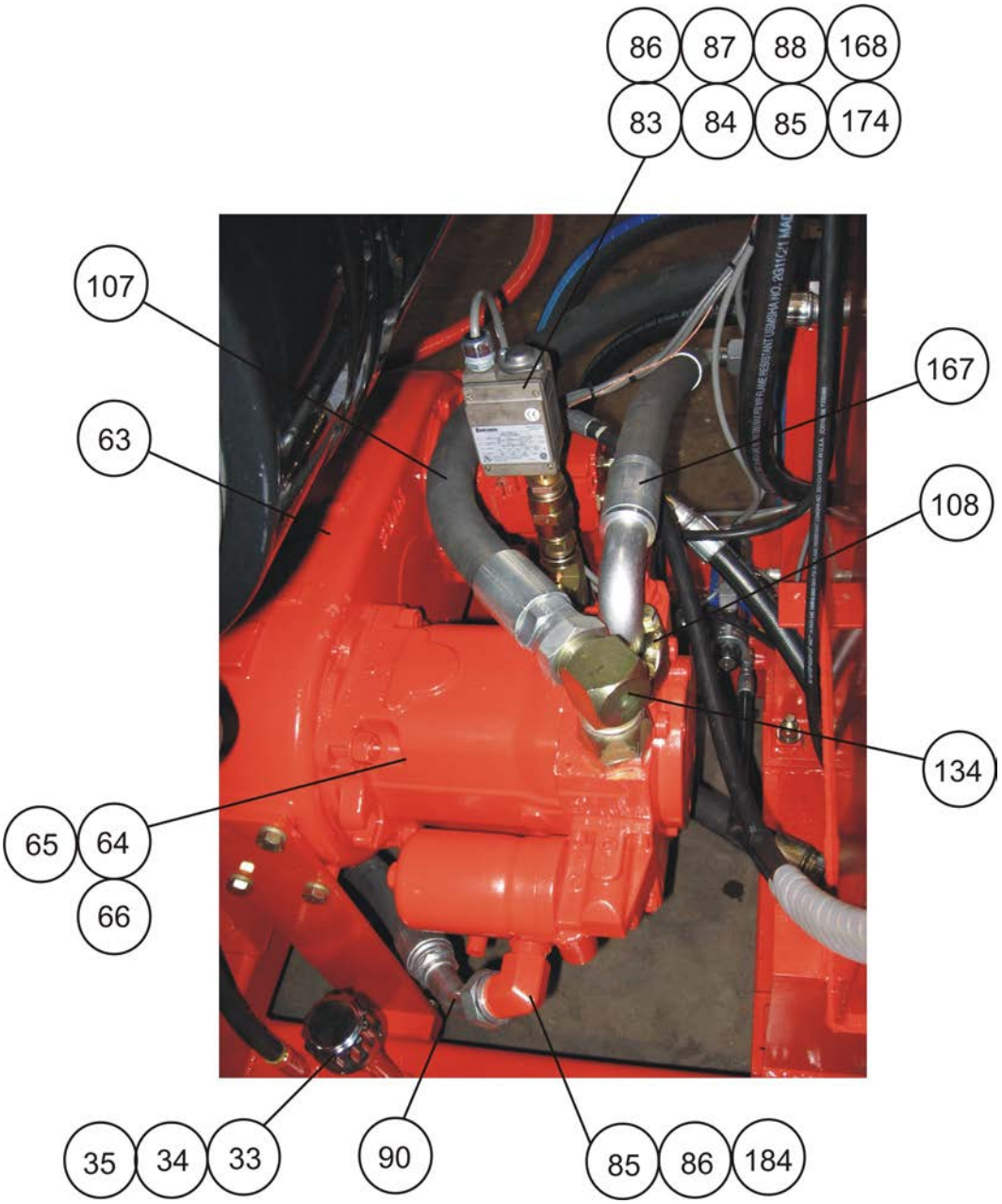

HP-365A POWER UNIT ASSEMBLY

PARTS LIST
HP-365A GENERAL ASSEMBLY

ITEM NO.	MKT PART NO.	DESCRIPTION	QUANTITY REQUIRED
1	417 20 01	HP-365A ENCLOSURE	1
2	901 53 15	HEX HEAD CAP SCREW	4
3	920 00 08	HEX NUT WITH NYLON INSERT	72
4	943 04 27	U-TAPPED HOLE NUT	30
5	417 30 43	SKID	1
6	803 11 06	RIGHT HAND DOOR	1
7	417 30 17	RIGHT HAND DOOR WITH PENDANT MOUNTING	1
8	417 20 06	LEFT HAND DOOR WITH PANEL	1
9	803 11 07	LEFT HAND DOOR	1
10	943 04 29	DOOR HOLDER	4
11	417 20 07	PANEL DOOR	1
12	943 04 20	HINGE, DOOR PANEL	1
13	943 04 42	DOOR LOCK	1
14	943 03 63	LARGE FLUSH HANDLE	4
15	943 04 73	BUTT HINGE	8
16	946 00 27	WEATHER PROOF MANUAL CASE	1
17	943 04 22	FOLDING STEP	6
18	944 02 30	CUMMINS ENGINE	1
19	932 00 09	U-CLAMP	1

PARTS LIST
HP-365AGENERAL ASSEMBLY

ITEM NO.	MKT PART NO.	DESCRIPTION	QUANTITY REQUIRED
20	933 03 41	BATTERY	1
21	406 03 04	BATTERY HOLD DOWN	1
22	406 03 05	BATTERY HOLD DOWN ROD	2
23	920 00 18	HEX NUT WITH NYLON INSERT	6
24	933 03 48	BATTERY CABLE	4 ft.
25	933 03 89	END CONNECTOR	2
26	933 03 46	SHRINK TUBE	2
27	901 55 13	HEX HEAD CAP SCREW	6
28	903 06 06	LOCK WASHER	6
29	933 03 43	TERMINAL, NEGATIVE	1
30	933 03 44	TERMINAL, POSITIVE	1
31	441 05 21	FUEL FILLER	1
32	931 02 67	FUEL LEVEL GAUGE	1
33	931 04 83	BREATHER/FILTER	1
34	930 02 00	NIPPLE-FUEL VENT	1
35	930 04 59	COUPLING-FUEL VENT	1
36	930 04 06	PIPE CAP-FUEL FILL	1
37	417 30 44	CONTROL PANEL ASSEMBLY	1
38	010 11 00	BUFFER BUMPER	4
39	943 04 33	FOUR PRONG KNOB	2
40	923 05 90	ADAPTER-FUEL RETURN @ SKID	1

PARTS LIST
HP-365A GENERAL ASSEMBLY

ITEM NO.	MKT PART NO.	DESCRIPTION	QUANTITY REQUIRED
41	923 00 66	ADAPTER-FUEL RETURN @ SKID	1
42	923 02 00	ADAPTER-FUEL RETURN @ SKID	1
43	923 11 84	ADAPTER-FUEL RETURN @ SKID	1
44	923 11 85	ADAPTER-FUEL SUCTION @ ENG.	1
45	417 22 10	PUSH ON FUEL LINE	1
46	417 22 11	PUSH ON FUEL LINE	1
47	901 58 37	HEX HEAD CAP SCREW REAR ENG. MOUNT	2
48	923 02 01	ADAPTER-FUEL SUCTION	1
49	417 30 28	HYDRAULIC RESERVOIR	1
50	901 59 25	HEX HEAD CAP SCREW HYD. TANK MOUNT	4
51	920 00 09	HEX NUT WITH NYLON INSERT HYD. TANK MOUNT	4
52	944 00 81	EXHAUST EXTENSION	1
53	931 03 59	SIGHT GAUGE	1
54	901 56 13	HEX HEAD CAP SCREW PUMP DRIVE	12
55	903 06 07	LOCKWASHER	15
56	901 57 09	HEX HEAD CAP SCREW	8
57	903 06 08	LOCKWASHER	8
58	417 22 02	PUMP DRIVE SUPPORT	2
59	417 21 18	PUMP DRIVE MOUNT	2
60	923 13 59	SPLIT FLANGE KIT 20 CODE 62	1

PARTS LIST
HP-365A GENERAL ASSEMBLY

ITEM NO.	MKT PART NO.	DESCRIPTION	QUANTITY REQUIRED
61	903 06 09	LOCKWASHER	19
62	901 58 13	HEX HEAD CAP SCREW	15
63	911 02 38	HYDRAULIC PUMP DRIVE	1
64	911 01 99	HYDRAULIC PUMP	1
65	902 05 15	FLAT WASHER HARDENED	4
66	900 50 07	HEX NUT	4
67	911 02 08	CLAMP PUMP	1
68	931 05 93	CLAMP CONTROL VALVE	1
69	931 07 64	RELIEF VALVE MODULE	1
70	931 05 95	VALVE SUBPLATE	1
71	417 22 06	OIL COOLER MOUNT	4
72	931 08 47	FILTER ASSEMBLY	1
73	931 08 48	MANIFOLD	1
74	931 08 55	FILTER ELEMENT	1
75	934 00 19	HYDRAULIC OIL COOLER	1
76	901 57 13	HEX HEAD CAP SCREW	6
77	417 22 03	OIL COOLER MOUNT	2
78	920 00 16	HEX NUT WITH NYLON INSERT	6
79	902 01 03	FLAT WASHER HARDENED	8
80	941 00 25	PANEL SHOCK MOUNT	4
81	944 02 35	SILENCER	1

PARTS LIST
HP-365A GENERAL ASSEMBLY

ITEM NO.	MKT PART NO.	DESCRIPTION	QUANTITY REQUIRED
82	944 00 31	RAIN CAP	1
83	933 03 31	TEMPERATURE SWITCH	1
84	923 00 16	ADAPTER-DRAIN @ BH	1
85	923 04 30	ADAPTER	1
86	923 03 80	ADAPTER	1
87	923 10 49	ADAPTER-PUMP	1
88	923 01 33	ADAPTER	1
89	923 10 73	ADAPTER-PUMP	1
90	417 22 12	HOSE-OIL COOLER TO PUMP	1
91	417 22 13	HOSE-OIL COOLER TO TANK	1
92	923 10 94	ADAPTER	1
93	931 06 92	OIL COOLER RETURN AT TANK CHECK VALVE	1
94	923 05 06	OIL COOLER RETURN AT TANK ADAPTER	3
95	931 06 32	PRESSURE SWITCH(1500PSI)	1
96	905 03 15	SOCKET HEAD CAP SCREW	4
97	923 11 29	ADAPTER	2
98	417 20 15	HOSE-CLAMP SWITCH TO 5000PSI	1
99	417 30 14	HOSE-MAIN PUMP TO SWITCH	1
100	931 06 33	PRESSURE SWITCH(75PSI)	1
101	417 20 16	HOSE-SWITCH TO CHARGE GAGE	1
102	417 20 27	HOSE-FILTER TO MAIN PUMP	1

PARTS LIST
HP-365A GENERAL ASSEMBLY

ITEM NO.	MKT PART NO.	DESCRIPTION	QUANTITY REQUIRED
103	927 00 48	DUST CAP	1
104	927 00 46	QUICK DISCONNECT	1
105	923 12 68	ADAPTER	1
106	923 10 76	ADAPTER-BULKHEAD	2
107	417 30 11	HOSE-PUMP PRESS. TO BH	1
108	923 09 50	SPLIT FLANGE KIT	2
109	927 00 47	DUST PLUG	1
110	417 30 40	HOSE-RETURN FILTER TO BH	1
111	950 01 27	HEX HEAD CAP SCREW	4
112	923 01 28	DUST PLUG	1
113	927 00 11	QUICK DISCONNECT	1
114	923 11 42	ADAPTER-BH C.O.,C.C., DRAIN	3
115	417 20 21	HOSE-DRAIN LINE TO BULKHEAD	1
116	923 00 17	ADAPTER-HYD. TANK	1
117	923 00 03	DUST CAP	1
118	927 00 05	QUICK DISCONNECT	1
119	923 09 17	ADAPTER-BH C.C. & C.O.	2
120	417 20 23	HOSE-C.C.&C.O. TO CLAMP VALVE	1
121	417 22 08	HOSE-CLAMP PUMP TO CLAMP VALVE	1
122	923 00 02	DUST PLUG	1
123	923 01 12	ADAPTER-CLAMP VALVE	1

PARTS LIST
HP-365A GENERAL ASSEMBLY

ITEM NO.	MKT PART NO.	DESCRIPTION	QUANTITY REQUIRED
124	923 11 13	ADAPTER-CLAMP VALVE	1
125	923 11 28	ADAPTER SHUTTLE VALVE&CLAMP PUMP	1
126	417 30 41	HOSE-SHUTTLE VALVE TO PUMP	1
127	931 05 98	SUCTION STRAINER	1
128	923 01 92	ADAPTER-CLAMP SUCTION	1
129	417 30 15	HOSE TANK SUCTION TO CLAMP PUMP	1
130	931 05 99	SUCTION STRAINER	1
131	930 04 09	BUSHING-TANK SUCTION	1
132	923 03 33	ADAPTER-PUMP SUCTION	1
133	417 30 13	HOSE-TANK SUCTION TO PUMP	1
134	923 10 40	ADAPTER-PUMP	1
135	417 22 09	HOSE-CLAMP PUMP DRAIN TO TANK	1
136	923 02 23	ADAPTER-TANK	3
137	923 01 94	ADAPTER-CLAMP PUMP	1
138	923 07 86	ADAPTER-CLAMP VALVE	1
139	417 22 07	HOSE-CLAMP VALVE TO TANK	1
140	417 20 28	HOSE CLAMP VALVE TO CLAMP SWITCH	1
141	923 11 48	ADAPTER-FILTER MANIFOLD	1
142	417 20 29	HOSE	1
143	923 11 49	ADAPTER	1
144	933 04 15	CABLE TIES	50

PARTS LIST
HP-365A GENERAL ASSEMBLY

ITEM NO.	MKT PART NO.	DESCRIPTION	QUANTITY REQUIRED
145	933 03 56	RING	2
146	931 06 31	MAGNETIC PLUG-TANK	1
147	411 00 21	NAMEPLATE "MOTOR RETURN"	1
148	411 00 23	NAMEPLATE "CLAMP CLOSE"	1
149	411 00 22	NAMEPLATE "CLAMP OPEN"	1
150	411 00 13	NAMEPLATE "DRAIN"	1
151	411 00 20	NAMEPLATE "PRESSURE TO MOTORS"	1
152	411 00 15	NAMEPLATE "#2 DIESEL FUEL"	1
153	923 05 79	ADAPTER-CLAMP VALVE	3
154	441 08 62	PENDANT AND CABLE ASSEMBLY	1
155	893 02 53	MKT LOGO	2
156	920 00 07	NUT	4
157	950 02 18	HEX NUT, METRIC	4
158	950 03 11	LOCK WASHER, METRIC	4
159	943 04 80	HEX HEAD FLANGE BOLT SS	100
	943 04 81	FLAT WASHER SS	100
160	930 00 30	SQ. HD. PIPE PLUG	1
161	933 04 20	ELECTRICAL CONNECTOR	2
162	420 00 85	NAMEPLATE "HYDRAULIC FLUID SHELL TELLUS 32 S"	1
163	923 03 19	ADAPTER-CLAMP PUMP	1
164	933 04 20B	CONNECTOR(BLACK	2
165	923 11 59	ADAPTER-OIL COOLER	2

PARTS LIST
HP-365A GENERAL ASSEMBLY

ITEM NO.	MKT PART NO.	DESCRIPTION	QUANTITY REQUIRED
166	927 00 05A	QUICK DISCONNECT	1
167	417 30 42	HOSE-PUMP TO FILTER	1
168	923 12 18	ADAPTER-PUMP	1
169	923 12 19	ADAPTER-PUMP	1
170	923 10 12	ADAPTER	2
171	923 05 88	ADAPTER	1
172	923 09 18	ADAPTER	1
173	923 01 87	CAP	1
174	923 05 56	ADAPTER	1
175	943 04 43	BUMPER	4
176	901 54 05	HEX HEAD CAP SCREW	4
177	946 00 29	FILLER CAP W/ HIGH NECK	1
178	417 21 16	MOUNT-PENDANT BOX	1
179	902 01 01	FLAT WASHER	4
180	920 00 07	LOCK NUT	4
181	902 05 08	FLAT WASHER	12
182	944 00 80	U-CLAMP	1
184	923 04 02	ADAPTER	1
185	923 11 31	ADAPTER	1
186	923 13 34	ADAPTER	1

PARTS LIST
HP-365A GENERAL ASSEMBLY

ITEM NO.	MKT PART NO.	DESCRIPTION	QUANTITY REQUIRED
187	950 01 40	THREADED ROD	4
188	950 03 08	METRIC LOCK WASHER	4
189	923 13 60	SPLIT FLANGE	1
190	931 08 55	FILTER ELEMENT	1
191	923 13 60	SPLIT FLANGE	1
192	417 30 49	THROTTLE CONTROL ASSY.	1

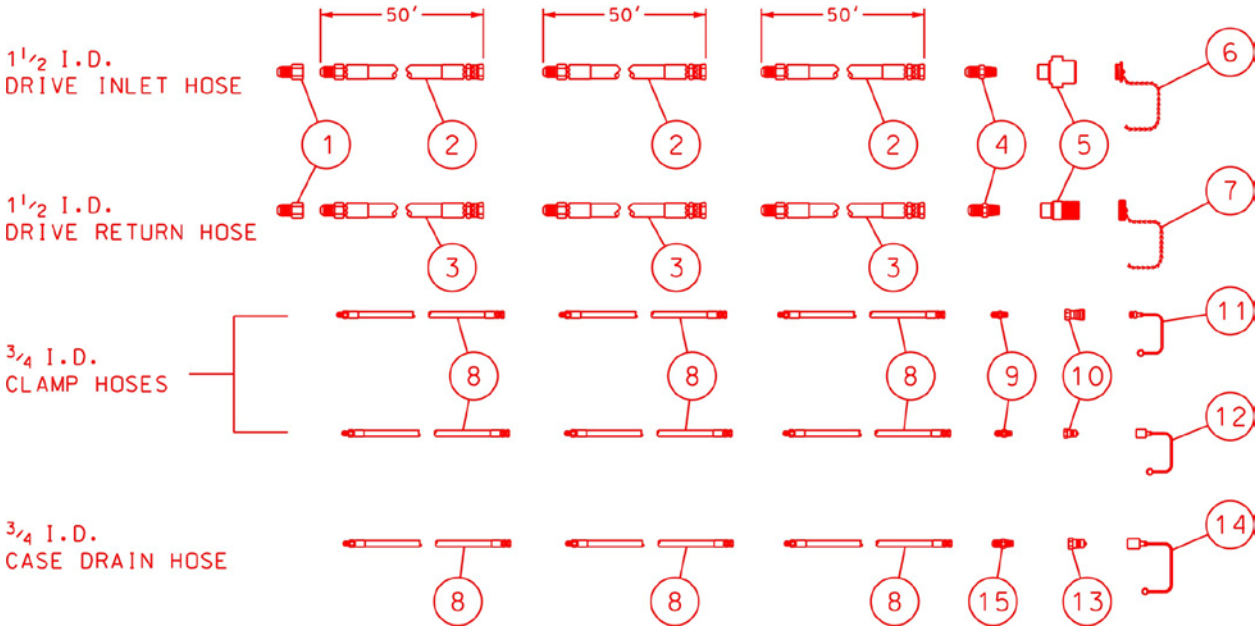

V-22 150' HYDRAULIC HOSE BUNDLE
(416 01 60)

PARTS LIST
V-22 150' HYDRAULIC HOSE BUNDLE
(416 01 60)

ITEM NO.	MKT PART NO.	DESCRIPTION	QUANTITY REQUIRED
1	923 08 77	ADAPTER	2
2	418 00 43	50' MOTOR INLET LINE	3
3	445 02 90	50' MOTOR RETURN LINE	3
4	923 04 73	ADAPTER	2
5	927 00 46	DRIVE QUICK DISCONNECT	1
6	927 00 47	DUST PLUG	1
7	927 00 48	DUST CAP	1
8	420 00 72	50' CLAMP & DRAIN HOSE ASSY.	9
9	923 00 20	ADAPTER	2
10	927 00 05	CLAMP QUICK DISCONNECT	1
11	923 00 02	DUST PLUG	1
12	923 00 03	DUST CAP	1
13	927 00 11A	QUICK DISCONNECT	1
14	923 01 29	DUST CAP	1
15	923 00 72	ADAPTER	1

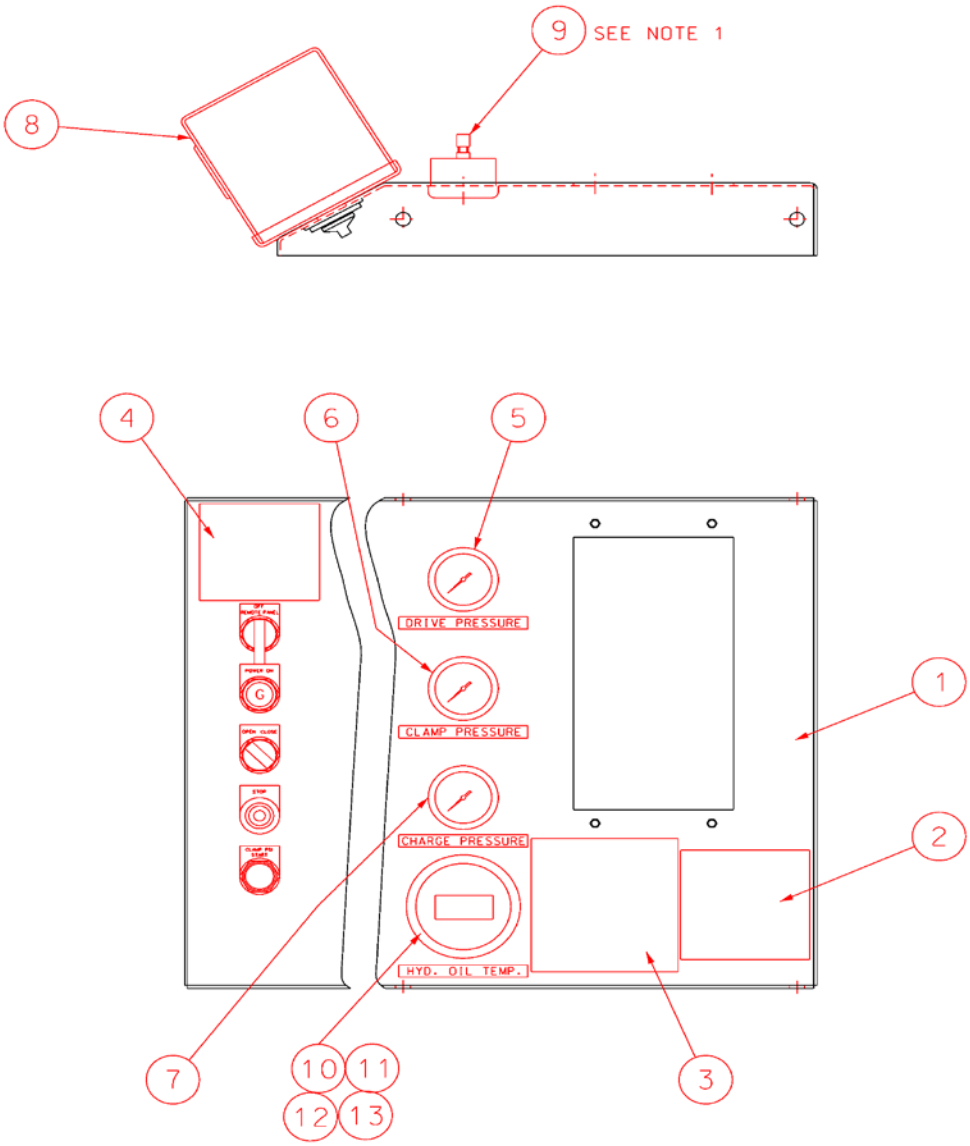

HP-365A CONTROL PANEL ASSEMBLY
(417 30 44)

PARTS LIST
HP-365A CONTROL PANEL ASSEMBLY
(417 30 44)

ITEM NO.	MKT PART NO.	DESCRIPTION	QUANTITY REQUIRED
1	417 30 46	CONTROL PANEL	1
2	411 00 31	HYD. POWER UNIT SPEC. TAG	1
3	699 02 77	SAFETY CAUTION SIGN	1
4	099 06 00	EAR PROTECTION DECAL	1
5	931 06 64	PRESSURE GAUGE	1
6	931 06 58	PRESSURE GAUGE	1
7	931 06 57	PRESSURE GAUGE	1
8	417 30 45	ELECTRICAL CONTROL ASSEMBLY	1
9	923 08 41	ADAPTER	3
10	931 08 61	TEMPERATURE GAUGE	1
11	903 07 04	EXTERNAL TOOTH LOCK WASHER	3
12	900 00 06	HEX NUT	3
13	943 03 12	ROUND HEAD MACHINE SCREW	1
14	417 30 48	ROUND HEAD MACHINE SCREW	1

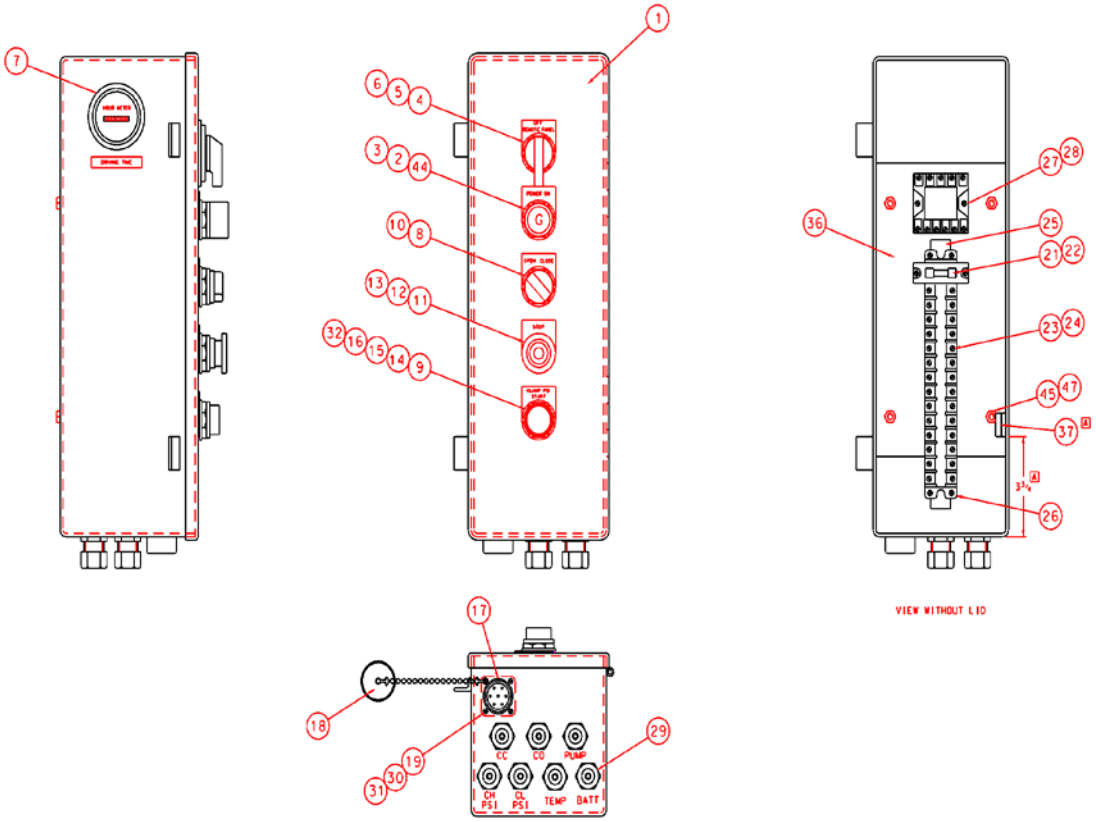

HP-365A/HP600 ELECTRICAL CONTROL ASSEMBLY
(417 30 45)

PARTS LIST
HP-365A/HP600 ELECTRICAL CONTROL ASSEMBLY
(417 30 45)

ITEM NO.	MKT PART NO.	DESCRIPTION	QUANTITY REQUIRED
1	417 30 47	ELECTRICAL CONTROL ENCLOSURE	1
2	933 02 06	STANDARD LEGEND PLATE, BLACK - POWER ON	1
3	933 01 49	GREEN LENS	1
4	933 04 00	SELECTOR SWITCH	1
5	933 03 21	CONTACT BLOCK	3
6	933 04 02	LEGEND PLATE, BLACK - REMOTE/OFF/PANEL	1
7	931 03 76	HOUR METER	1
8	933 04 19	SELECTOR SWITCH	1
9	933 00 06	CONTACT BLOCK	1
10	933 03 95	LEGEND PLATE, BLACK - OPEN/CLOSE	1
11	933 01 45	PUSHBUTTON - RED	1
12	933 02 61	STANDARD LEGEND PLATE, RED - STOP	1
13	933 01 51	CONTACT BLOCK	1
14	933 03 91	ILLUMINATED PUSHBUTTON	1

PARTS LIST
HP-365A/HP600 ELECTRICAL CONTROL ASSEMBLY
(417 30 45)

ITEM NO.	MKT PART NO.	DESCRIPTION	QUANTITY REQUIRED
15	933 03 92	LENS BUTTON - GREEN	1
16	933 03 93	LEGEND PLATE, BLACK - START/CLAMP PSI	1
17	933 04 03	PENDANT RECEPTACLE	1
18	933 04 04	RECEPTACLE COVER & CHAIN	1
19	943 03 11	SOCKET HEAD CAP SCREW	4
20	933 04 09	SHRINK TUBE	1
21	933 04 18	FUSE	1
22	933 02 56	FUSE BLOCK	1
23	933 02 13	JUMPER	1
24	933 01 97	TERMINAL BLOCK	14
25	933 02 00	CHANNEL	1
26	933 02 51	INSTALLATION KIT	1
27	933 03 28	RELAY	1
28	933 04 08	RELAY SOCKET	1
29	933 03 69	CONNECTOR	7
30	943 04 10	HEX NUT	8
31	943 04 11	LOCKWASHER	4
32	933 04 16	ILLUMINATED PUSHBUTTON GUARD	1

PARTS LIST
HP-365A/HP600 ELECTRICAL CONTROL ASSEMBLY
(417 30 45)

ITEM NO.	MKT PART NO.	DESCRIPTION	QUANTITY REQUIRED
33	933 03 70	WIRE	60’
34	933 02 98	STRANDED WIRE	63’
35	943 04 30	LOCK NUT	8
36	417 24 02	SUBPLATE	1
37	933 04 31	TERMINAL BLOCK	1
38	417 24 00A	ELECTRICAL CONTROL, ASSEBLE	1
39	920 00 08	LOCK NUT	8
40	943 04 41	HEX HEAD FLANGE BOLT	4
41	933 05 08	END CONNECTOR	2
42	933 04 03	PENDANT RECPTACLE	1
43	933 04 17	CONNECTOR, CRIMP ON	27
44	933 04 25	INDICATOR LIGHT (12V)	1
45	901 53 17	HEX HEAD CAP SCREW	4
46	902 01 01	FLAT WASHER	8
47	900 50 01	HEX NUT	8
48	903 06 04	LOCKWASHER	4

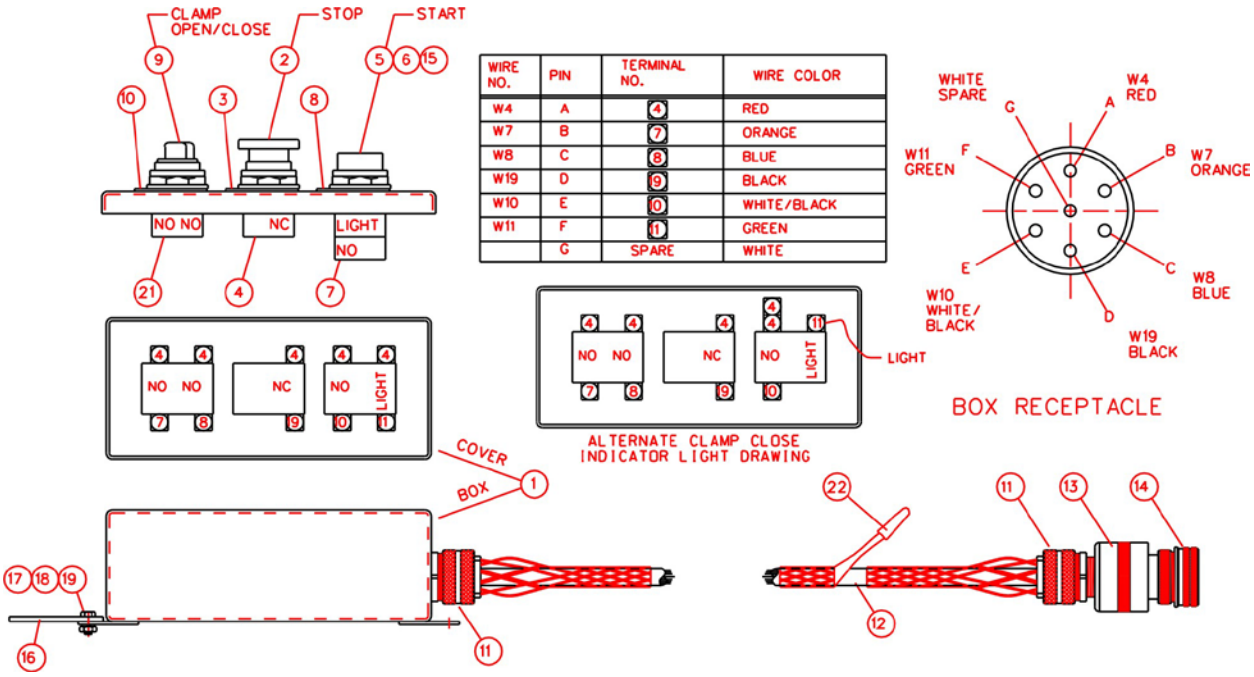

WIRE NO.	PIN	TERMINAL NO.	WIRE COLOR
W4	A	4	RED
W7	B	7	ORANGE
W8	C	8	BLUE
W19	D	9	BLACK
W10	E	0	WHITE/BLACK
W11	F	11	GREEN
	G	SPARE	WHITE

REMOTE PENDANT AND CABLE ASSEMBLY
(441 08 62)

PARTS LIST
REMOTE PENDANT AND CABLE ASSEMBLY
(441 08 62)

ITEM NO.	MKT PART NO.	DESCRIPTION	QUANTITY REQUIRED
1	933 03 90	PUSHBUTTON ENCLOSURE	1
2	933 01 45	PUSHBUTTON - RED	1
3	933 02 61	STANDARD LEGEND PLATE, RED - STOP	1
4	933 01 51	CONTACT BLOCK	1
5	933 03 91	ILLUMINATED PUSHBUTTON	1
6	933 03 92	LENS BUTTON - GREEN	1
7	933 00 06	CONTACT BLOCK	1
8	933 03 93	LEGEND PLATE, BLACK - START/CLAMP/PSI	1
9	933 04 19	SELECTOR SWITCH	1
10	933 03 95	LEGEND PLATE, BLACK - OPEN/CLOSE	1
11	933 03 96	CORD GRIP WITH STRAIN RELIEF	1
12	933 03 97	CONDUCTOR, 50' LONG	1
13	933 03 98	CORD GRIP ADAPTER	1
14	933 03 99	ELECTRICAL PLUG	1
15	933 04 16	ILLUMINATED PUSHBUTTON GUARD	1
16	441 02 01	PENDANT STORAGE PLATE	1
17	901 02 06	HEX HEAD CAP SCREW	2
18	900 00 06	HEX NUT	2
19	903 00 07	LOCKWASHER	2

PARTS LIST
REMOTE PENDANT AND CABLE ASSEMBLY
(441 08 62)

ITEM NO.	MKT PART NO.	DESCRIPTION	QUANTITY REQUIRED
21	933 03 21	CONTACT BLOCK	1
22	933 04 30	DROP GRIP	1
23	933 04 31	LOCK NUT	1
24	933 04 32	S-HOOK	1

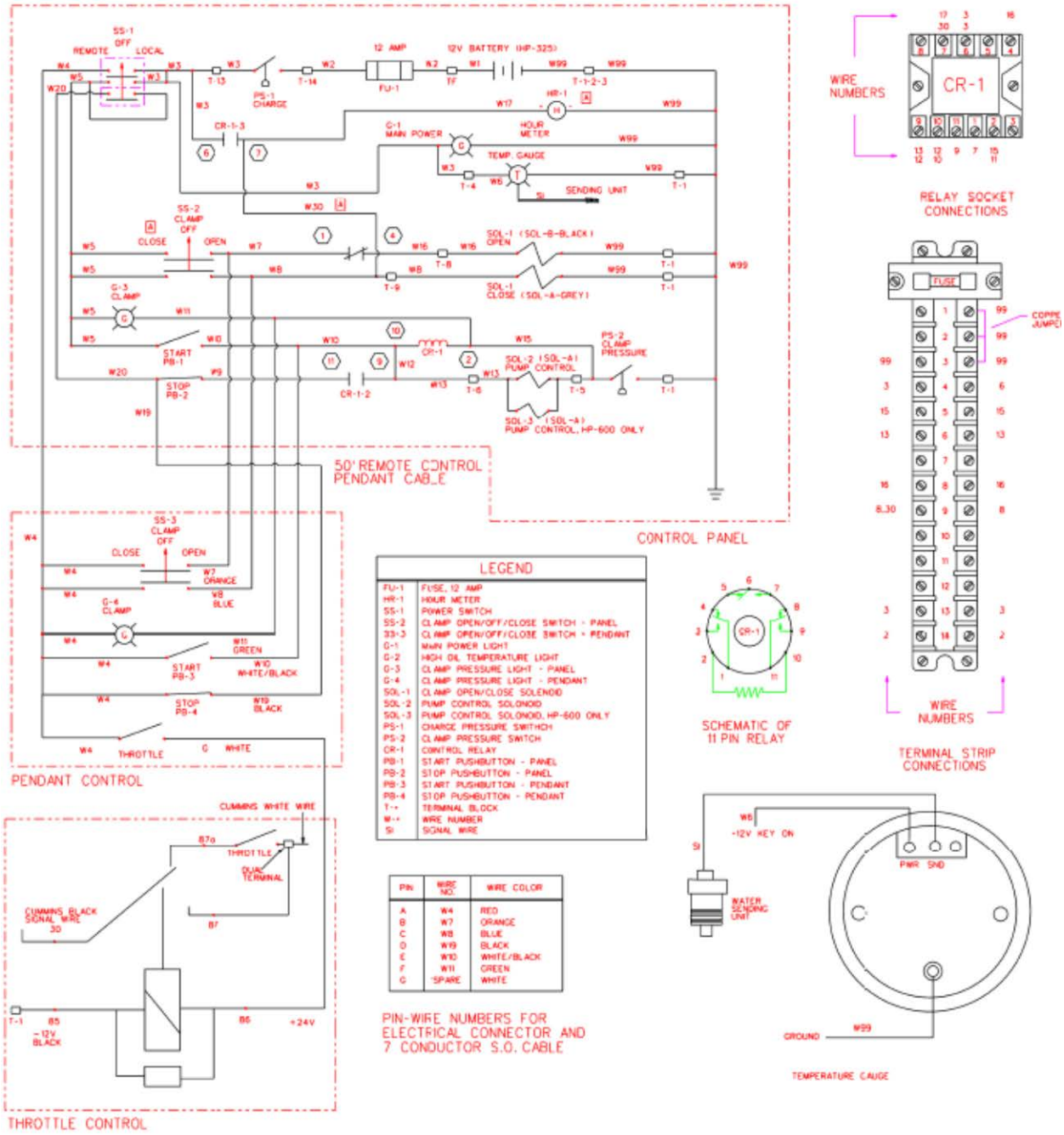

HP-365A ELECTRICAL SCHEMATIC
(417 30 50)

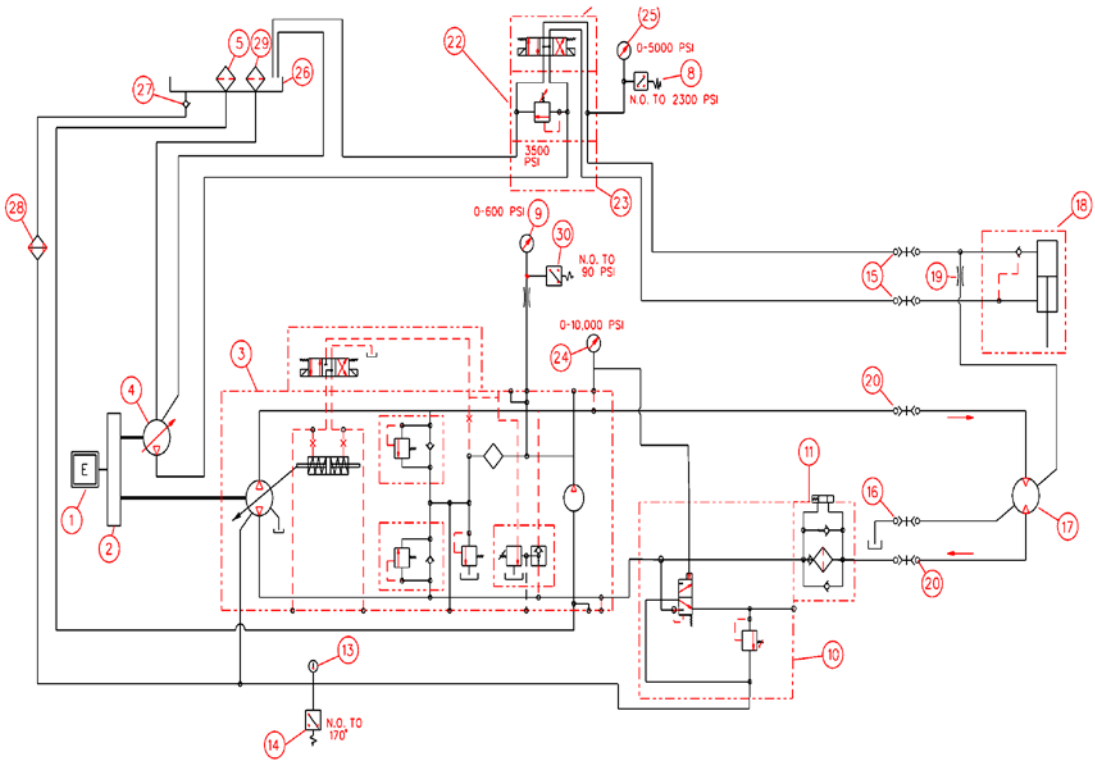

HP-365A HYDRAULIC SCHEMATIC
(417 00 12)

PARTS LIST

HP-365A HYDRAULIC SCHEMATIC
(417 00 12)

ITEM NO.	MKT PART NO.	DESCRIPTION	QUANTITY REQUIRED
1	944 01 78	CUMMINS M11 ENGINE	1
2	911 02 10	HYDRAULIC PUMP DRIVE	1
3	911 01 99	HYDRAULIC PUMP	1
4	911 02 08	HYDRAULIC PUMP	1
5	931 05 99	SUCTION STRAINER	1
6	931 06 00	REPLACEMENT FILTER ELEMENT	1
7	931 06 01	REPLACEMENT FILTER ELEMENT	1
8	931 06 32	PRESSURE SWITCH (N.O. TO 2300 PSI)	1
9	931 06 06	CHARGE PRESSURE GAUGE	1
10	931 08 47	FILTER ASSEMBLY	1
11	931 08 48	MANIFOLD	1
13	931 02 62	TEMPERATURE GAUGE	1
14	933 03 31	TEMPERATURE SWITCH	1
15	927 00 05	CLAMP QUICK DISCONNECT	2
16	927 00 11	CASE DRAIN QUICK DISCONNECT	1
17	910 00 65	HYDRAULIC MOTOR	1
18	416 01 31	CLAMP CYLINDER	1
19	405 03 01	FLUSHING FLOW CONTROL ORIFICE	1
20	927 00 46	DRIVE QUICK DISCONNECT	2

HP-365A HYDRAULIC SCHEMATIC
(417 00 12)

ITEM NO.	MKT PART NO.	DESCRIPTION	QUANTITY REQUIRED
21	931 05 93	CLAMP CONTROL VALVE	1
22	931 05 94	RELIEF VALVE MODULE	1
23	931 05 95	VALVE SUBPLATE	1
24	931 06 08	DRIVE PRESSURE GAUGE	1
25	931 06 07	CLAMP PRESSURE GAUGE	1
26	417 01 02	HYDRAULIC RESERVOIR	1
27	931 05 96	CHECK VALVE	1
28	934 00 19	HYDRAULIC OIL COOLER	1
29	931 05 98	SUCTION STRAINER	1
30	931 06 33	PRESSURE SWITCH (N.O. TO 90 PSI)	1

NOTES:

1. SEAL INSTALATION TOOL 495 05 58 MUST BE MUST BE USED TO INSTALL PISTONS IN HOUSING.
2. ITEM 19, SEALING DISC, AND ITEM 21, PISTON, MUST BE INSTALLED AS MARKED
3. REMOVE PIPE PLUG TO INSTALL ITEM 19 TO ALLOW AIR TO ESCAPE. APPLY SMALL AMOUNT OF LOCKTITE 272 TO PLUG AT ASSEMBLY. PLUG MUST BE FLUSH WITH BOTH SIDES OF SEALING DISC
4. HAND TIRGHTEN LOCK VALVE ONLY. OVER TIGHTENING WILL DAMAGE LOCK VALVE ASSEMBLY & DAMAGE CLAMP ASSEMBLY
5. ITEM 4, LOCKWASHER, MUST BE INSTALLED FOR PROPER JAW RETENSION

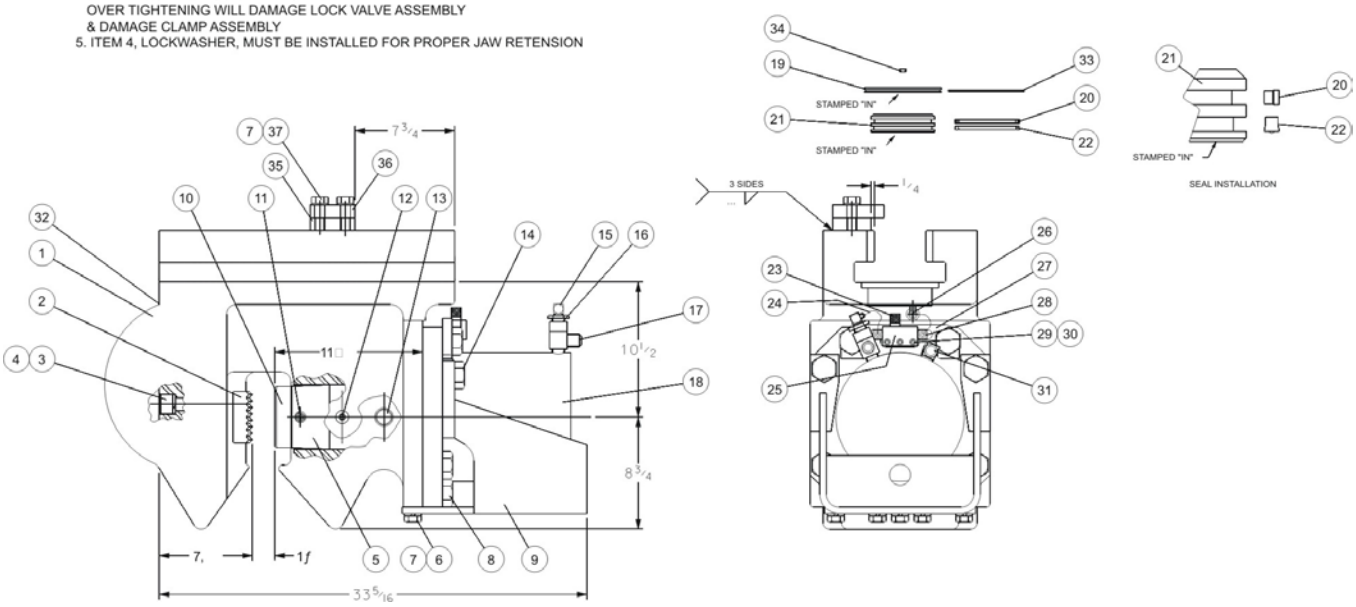

CAISSON CLAMP ASSEMBLY
(4 495 05 39)

CAISSON CLAMP ASSEMBLY
(4 495 05 39)

ITEM NO.	MKT PART NO.	DESCRIPTION	QUANTITY REQUIRED
1	495 05 32	CAISSON CLAMP HOUSING	1
2	495 03 50	FIXED JAW	1
3	905 11 31	SOCKET HEAD CAP SCREW	2
4	903 04 21	LOCKWASHER	2
5	495 00 63	JAW SLIDE	1
6	901 59 13	HEX HEAD CAP SCREW	4
7	903 01 17	LOCKWASHER	6
8	901 62 18	HEX HEAD CAP SCREW	4
9	405 03 04	CYLINDER SHIELD	1
10	495 00 62	MOVABLE JAW	1
11	924 00 55	ROLL PIN	1
12	942 00 14	GREASE FITTING	2
13	420 01 38	CLAMP SLIDE PIN	1
14	901 62 24	HEX HEAD CAP SCREW	4
15	923 11 34	ADAPTER	1
16	923 00 60	ADAPTER	1
17	923 11 33	ADAPTER	1
18	416 01 31	CLAMP CYLINDER	1
19	495 05 53	DISC	3

CAISSON CLAMP ASSEMBLY FOR CAISSON BEAMS
(495 05 39)

ITEM NO.	MKT PART NO.	DESCRIPTION	QUANTITY REQUIRED
20	913 02 02	GLASS FILLED TEFLON SEAL	3
21	495 04 23	PISTON	3
22	913 02 05	U-SEAL	3
23	931 07 54	CHECK VALVE	1
24	495 05 57	HOSE	2
25	495 04 31	CHECK MOUNT HOLDER	1
26	923 11 35	ADAPTER	1
27	495 05 55	CHECK VALVE PLATE	1
28	923 09 19	ADAPTER	2
29	905 04 13	SOCKET HEAD CAP SCREW	3
30	903 04 10	LOCK WASHER	3
31	923 00 17	ADAPTER	1
32	931 06 53	BLEEDER VALVE	1
33	913 02 06	O-RING	3
34	930 00 57	PIPE PLUG	3
35	495 06 12	MOUNT BLOCK	1
36	495 06 13	STOP BLOCK	1
37	901 59 17	HEX HEAD CAP SCREW	2

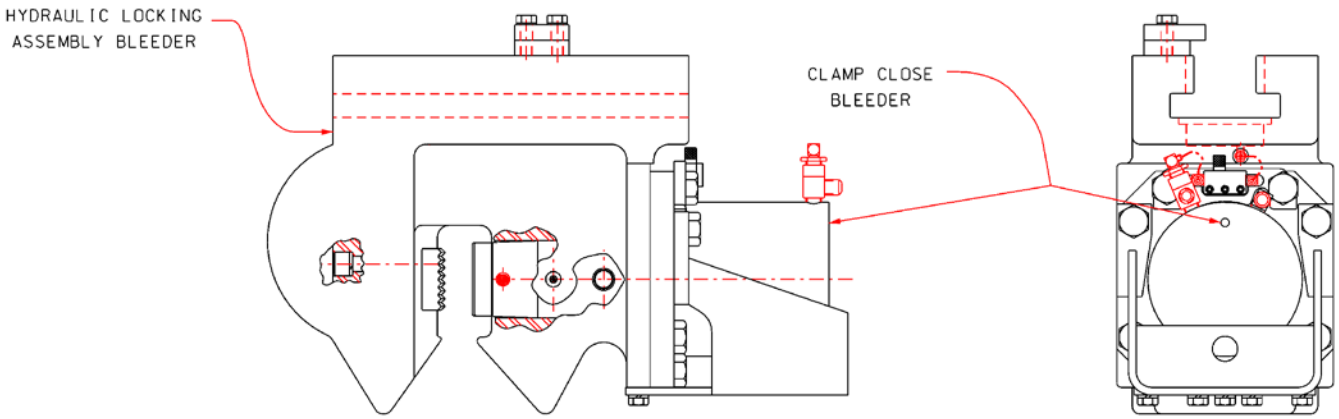

CAISSON CLAMP INSTALLATION AND BLEEDING PROCEDURE

THE FOLLOWING PROCEDURES MUST BE DONE TO ENSURE PROPER CLAMPING FUNCTION
- JAW DAMAGE WILL OCCUR IF NOT DONE -
AFTER CONNECTING CAISSON BEAM TO VIBRATORY HAMMER TIGHTEN ALL FASTENERS WITH SUPPLIED ANVIL WRENCH.

1) WITH ALL HYDRAULIC LINES CONNECTED AS COLOR CODED ON BEAM ASSEMBLY, CONNECT ALL HOSES TO POWER UNIT
2) START POWER UNIT
3) SELECT THE CLAMP CLOSE FUNCTION ON PENDENT CONTROL.

NOTICE: VERIFY THAT ALL PERSONNEL ARE CLEAR OF CLAMPING ASSEMBLY

4) WITH CLAMP PRESSURE REGISTERED ON GAUGE AND CLAMPS CLOSED, BLEED CLAMP CYLINDER AT INDICATED BLEEDER PORT. AT THIS TIME ALSO BLEED HYDRAULIC LOCKING PISTON ASSEMBLY PORT.

DO NOT BACK BLEEDERS OUT MORE THAN ONE COMPLETE TURN

FOR ASSISTANCE CALL 1-314-869-8600

HYDRAULIC LOCKING CAISSON CLAMPS ADJUSTMENT

READ THESE INSTRUCTIONS COMPLETELY BEFORE ATTEMPING TO ADJUST CAISSON CLAMPS ON BEAM

Connect all hydraulic hoses to power unit.

Suspend the vibratory pile driver vertically with bottom of clamp assemblies resting on a solid surface.

Clean the lower sliding surfaces of the caisson beam to allow the clamp assemblies to slide without debris getting between the clamp assemblies and the caisson beam.

Start engine and allow to run at a low idle.

1) Operate the clamp open / close switch to the open position and hold in the OPEN position. Verify that the clamping jaws have completely opened. It may take 10 seconds or more for the jaws to completely retract. Return clamp selector switch to the center position.

2) Locate the LOCKING VALVE located on the hydraulic clamping assembly. See picture below. Open the locking valve by turning the knob counter clockwise (when viewed from above). The weight of the vibratory pile driver resting on the clamp assemblies will retract the locking pistons to in to the caisson clamp housing. The clamps should now freely slide on the caisson beam.

   NOTE: BEAM SURFACES MUST BE CLEAN WITH NO DEBRIS TO ALLOW CLAMPS TO SLIDE FREELY. CLAMPS SHOULD SLIDE FREELY ON BEAM WHAN RELEASED.
   DO NOT HAMMER ON CLAMP ASSEMBLY TO MOVE THEM.
   THE CLAMP ASSEMBLY CAN BE EASILY MOVED WITH A “COME A LONG”.

3) Slide clamp assemblies into desired position, making sure to center that clamps on the beam.

4) With the clamps located in the desired position, HAND TIGHTEN ONLY the lock valve knob by turning the knob of the lock valve clockwise (when viewed from above) until snug.
   NOTE. Use of pliers or excessive force to tighten lock valve will damage lock valve sealing seat and cause damage to caisson clamp assemblies

5) With all personal clear of caisson clamping assemblies, and engine running at an idle, move the clamp open / close selector switch to the close position.
   NOTE: THE CLAMPING JAWS WILL BEGIN TO CLOSE, VERIFY THAT ALL PERSONAL AND TOOLS ARE CLEAR OF THE CLAMPING JAW AREA.

WITH LOCKING VALVES KNOBS SNUGGED CLOSED, ANY TIME THE CLAMP IS CLOSED, THE CLAMPS WILL LOCK IN POSITION TO THE CAISSON BEAM AND SHOULD STAY LOCKED UNTIL RELEASED AS OUTLINED IN STEP 1.